Technical cleanliness of pointer measuring instruments of special versions

Application area

This document describes manufacturing processes for special versions that require a very high technical cleanliness of the wetted parts.

This applies for mechanical and mechatronic pointer measuring instruments with stainless steel materials (e.g. 316L) and special materials (e.g. Monel, Hastelloy).

Instrument	Model
Bourdon tube pressure gauge	1, 2, 3
Diaphragm pressure gauge	4
Absolute pressure gauge	5
Capsule pressure gauge	6
Differential pressure gauge	7
Mechatronic pressure gauge	PGS, DPGS, PGT, DPGT, APGT
Bimetal thermometer	TG53, TG54, 55
Gas-actuated thermometer	73
Mechatronic thermometer	TGS55, TGS73, TGT73

Pointer measuring instruments with wetted parts from copper alloy (brass) and diaphragm seals are not considered in this technical information.

WIKA expertise

WIKA has decades of experience in the production of pressure gauges and thermometers guarantees a high level of cleanliness of the wetted parts. This is ensured, among other things, by the use of standardised processes and the support of the WIKA expert group for technical cleanliness.

For the pressure gauge version “Oil- and grease-free for oxygen”, WIKA confirms a hydrocarbon limit value of < 550 mg/m^2 for scale ranges ≤ 30 bar [≤ 400 psi] and < 220 mg/m^2 for scale ranges > 30 bar [> 400 psi], based on periodically recurring tests (in line with ISO 15001:2012 and ASTM G93 level D/E).

Additional fundamental sampling tests (burn-out test when exposed to oxygen pressure surges) at external test centres confirm the basic suitability of the “Oil and grease-free for oxygen” version of pressure gauges for this medium.

These special versions, and the additional cleaning-related manufacturing processes carried out for them, are described below.

Smart in sensing

Version: “Silicone-free”

Silicone-free or silicone oil-free means that all components in contact with the atmosphere must be largely free of silicone. This requirement is often made for paint finishing systems (e.g. in the automotive industry). The smallest silicone residues can lead to painting defects (so-called silicone craters) and ruin the painting result.
However, for process and production reasons, it is not possible to provide general confirmation of the absence of paint wetting impairment substances (freedom from PWIS) by selecting this version.

Cleaning steps in the production process

- If necessary, thorough hand cleaning before starting production, without the use of skin care products (hand cream)
- Regular cleanliness checks and, if necessary, cleaning of equipment (test and adjustment benches)
- Avoidance of assembly aids with silicone-containing, paint wetting impairment substances, where possible
- No storage of silicone or lubricating materials in the vicinity of the production process, where possible
- Selected models (e.g. diaphragm pressure gauges) receive separate cleaning and drying of selected parts and assemblies before assembly (also for internal surfaces)
- 100% cleaning of the surrounding parts of the instrument before packaging
- Individual packaging in silicone-free, sealable or heat-sealed plastic bag

Marking “Silicone-free”

Version: “Oil- and grease-free”

The requirement for internal parts to be free of oil and grease is often made in the food and pharmaceutical industries. This requirement also exists in other sectors such as industrial gases, water and wastewater, machine building and automation.

Cleaning steps in the production process

- Regular cleanliness checks and, if necessary, cleaning of equipment (test and adjustment benches)
- The instruments are primarily adjusted using oil- and grease-free, dry compressed air or nitrogen. For higher pressure ranges, adjustment is only possible with water, followed by drying of all wetted parts in a vacuum oven.
- Particularly thorough visual inspection of the surfaces before shipping

Marking “Oil- and grease-free”

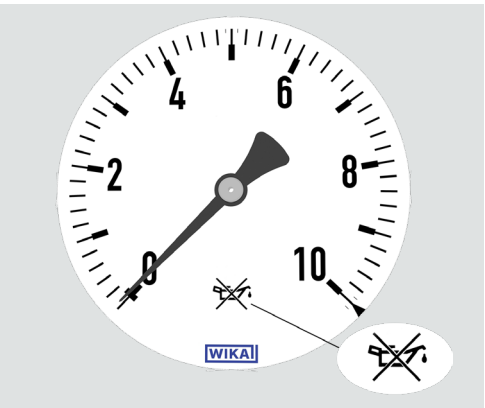

Version: “Oil and grease-free for oxygen”

The use of oxygen is very versatile and widespread. The demands are extremely high due to the easy flammability and high explosion risk of oxygen. Oil and grease are particularly dangerous in the presence of oxygen, as they can easily be an ignition source and burn with explosive ferocity. This ignition source is not always obvious in piping systems. A fire can be caused by friction, high flow rates, heating due to turbulence or adiabatic compression. For example, gas with a high flow rate can suddenly hit an obstacle, e.g. a closed valve. If pipe connections are contaminated with mineral oils or greases, oxidation reactions with the carbon components can easily occur. The resulting high temperatures can then lead to spontaneous combustion and trigger a chain reaction.
For oxygen applications, WIKA recommends the use of a restrictor in the process connection to reduce the rate of pressure increase in the measuring system.

Applications of oxygen

- Breathing gas in medicine and aerospace
- Oxidising agents in combustion processes to achieve high temperatures
- Metallurgy, in pig iron and steel production and in copper refining
- Chemistry and biology
  - Olefin oxidation, partial oxidation of coal and heavy oil
  - Production of hydrogen and synthesis gas, sulphuric and nitric acid, acetylene
- Welding, cutting, separating, flame annealing
- Drinking water and wastewater treatment
- Semiconductor technology
- Fuel cells

Cleaning steps in the production process

- Regular cleanliness checks and, if necessary, cleaning of equipment (test and adjustment benches)
- The instruments are primarily adjusted using oil- and grease-free, dry compressed air or nitrogen. For higher pressure ranges, only adjustment with water is possible. In this case, the entire measuring system is then dried in a vacuum oven.
- Use of wetted materials, system fill fluids and casing fill fluids that are suitable or approved for use in conjunction with oxygen
- Before installation, the wetted parts are cleaned (e.g. in an ultrasonic bath) and then dried again. This also applies, in particular, to internal surfaces.
- After cleaning, internal transport is carried out in separately sealed and cleaned transport containers.
- The instruments are largely handled with gloves, so as not to contaminate internal parts
- Particularly thorough visual inspection of the surfaces
- The process connection is usually sealed with a protective cap for shipping
- Instruments are packed in sealed plastic bags (sometimes with desiccant)

Marking “Oil and grease-free for oxygen”

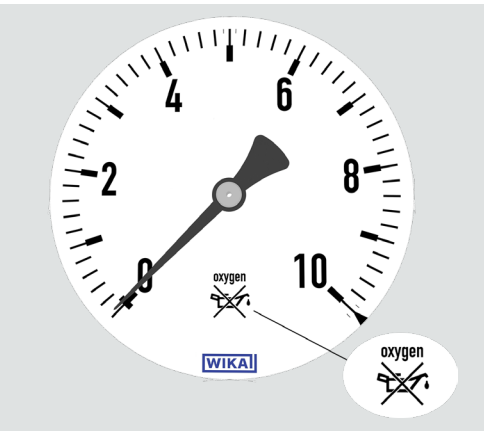

© 11/2023 WIKA Alexander Wiegand SE & Co. KG, all rights reserved.
The information provided in this document corresponds to the current state of the art and may vary slightly depending on the production site.
The information provided is for general information purposes only and is not legally binding. We reserve the right to make changes in individual cases or special versions.
In the event of a different interpretation of the translated and the English data sheet, the English wording shall prevail.

WIKA Alexander Wiegand SE & Co. KG
Alexander-Wiegand-Straße 30
63911 Klingenberg/Germany
Tel. +49 9372 132-0
info@wika.de
www.wika.com

File formats for customer logos on dials

Technology

WIKA uses the latest technologies to custom print pressure gauge and thermometer dials. The high-quality printing features excellent UV resistance for long-lasting optimal readability of the measuring instruments.

The scale is defined using a specifically developed software tool and then drawn automatically using CAD software.

Trademark with customer logo

In pointer gauges, the dial is the component that permits the greatest variance for individual customer specifications. Since the dial is the focus of any measurement, WIKA is happy to fulfil the wish of many customers to have their own brand logo printed onto it.

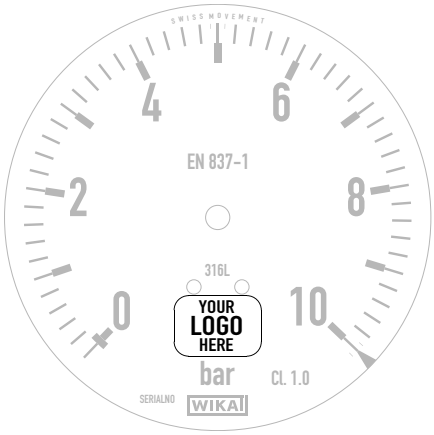

Example of dial with customer logo

Requirements for the logo file

File format
For optimal representation of logos, they should be supplied in a vector format, as this allows scaling without losses.

Vector formats (preferred)	
File type	**Description**
EPS / PS	Encapsulated Postscript / Postscript
AI	Adobe Illustrator
CDR	Corel Draw
DWG	Autodesk AutoCAD
DXF	Drawing Interchange File Format

Bitmap formats (if vector format not available)	
File type	**Description**
TIFF / TIF	Tagged Image File Format
PNG	Portable Network Graphics
JPG / JPEG	Joint Photographic Experts Group

Size for bitmap formats
At least 1,200 pixels, width or height

Colour specifications
- Full-tone colours (RAL or Pantone)
- Colour space (CMYK or sRGB)

In the event that there is no colour specification, the correctness of custom colours cannot be guaranteed. Files in bitmap format are vectorised for further processing.

Data administration
For the correct processing of the logo file, it must be stated whether it replaces an existing logo. Ideally, the customer logo should be transmitted to the sales team contact via the **questionnaire** in the download area of the WIKA website.

Smart in sensing

© 07/2021 WIKA Alexander Wiegand SE & Co. KG, all rights reserved.
The specifications given in this document represent the state of engineering at the time of publishing.
We reserve the right to make modifications to the specifications and materials.

WIKA Alexander Wiegand SE & Co. KG
Alexander-Wiegand-Straße 30
63911 Klingenberg/Germany
Tel. +49 9372 132-0
info@wika.de
www.wika.de

Mounting arrangements
Instrument hook-ups for the process industry

In many applications within the process industries, measuring instruments are exposed to critical operating conditions. In order to be able to withstand, for example, strong pressure surges or extreme temperatures, WIKA attaches valves, protective devices and mounting accessories to the pressure measuring instrument, depending on the application. This ensures a stable measurement and optimises maintenance and servicing activities.

Example of a mounting arrangement

Added value for mounting arrangements

The combination of pressure measuring instruments with matched components enables the protection and the extension of the function of the entire measuring unit. WIKA offers the qualified assembly of all elements with the pressure measuring instrument into a mounting arrangement, known as an “instrument hook-up”.
The diverse portfolio of the attachable components results from the variation in the applications and customer requirements.

Valves

Models IV1, IV2 – Shut-off valve

Needle valve and multiport needle valve
Block-and-bleed valve

Data sheets AC 09.19 and AC 09.21

Model IVM – Monoflange

Compact block-and-bleed arrangement with flange connection

Data sheet AC 09.17

Models IV3, IV5 – Valve manifold

Shut-off, pressure equalising, purge and vent valves for differential pressure measuring instruments

Data sheet AC 09.23

Model 910.10 – Stopcock

Shut-off device for pressure measuring instruments

Data sheet AC 09.01

Model 910.11 – Shut-off valve

Shut-off and throttle valve

Data sheet AC 09.02

Smart in sensing

Protective devices and adapters

Model 910.12 – Snubber

Protection from pressure surges and pulsations in the medium

Data sheet AC 09.03

Model 910.13 – Overpressure protector

Adjustable protection against overpressure

Data sheet AC 09.04

Model 910.22 – In-line filter

Filtration of solids from gaseous and liquid media

Data sheet AC 09.10

Model 910.14 – Connection adapter

Adapter pieces for the mounting of valves and protective devices

Data sheet AC 09.05

Model 910.15 – Syphon

Protection from pulsations and overheating through the medium

Data sheet AC 09.06

Mounting instructions

WIKA mounts the desired components to process industry pressure measuring instruments. For the mounting, WIKA standards with respect to sealing and leak testing apply. The flow direction on valves and valve manifolds is marked with an arrow. This marking is particularly important for the orientation of differential pressure instruments on valve manifolds.
If there are no alternative customer specifications, the instrument hook-up is assembled starting from the pressure measuring instrument in the following sequence.

Attachment sequence

Attachment sequence starting from the pressure measuring instrument		Standard orientation and options
Model 910.14 **Connection adapter**	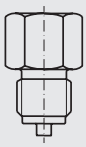	For adapting threads or to enable positioning of the pressure measuring instrument through a 360° range.
Model 910.12 **Snubber**	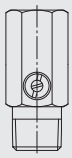	Adjustment screw will be aligned to the front, in the direction of the dial.
Model 910.13 **Overpressure protector**	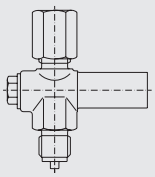	Adjustment screw (longer side) will be aligned to the right, as shown in the drawing. The set value, as standard, depends on the pressure element: Bourdon tube: 1.1 x full scale value Diaphragm or capsule element: Between full scale value and max. permissible overpressure

Attachment sequence starting from the pressure measuring instrument		Standard orientation and options
Model 910.22 **In-line filter**	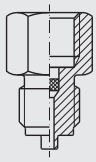	To filter out solid substances from gaseous and liquid media.
Model 910.11 **Shut-off valve**	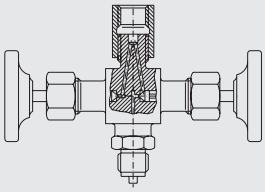	■ Shut-off valve without test connection per DIN 16270 (with vent screw) ■ Shut-off valve with test connection per DIN 16271 (with vent screw) ■ Shut-off valve with separate shut-off test connection per DIN 16272
Model 910.10 **Stopcock**	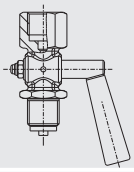	■ Shut-off device ■ Shut-off device with test connection
Models IV1, IV2 **Shut-off valve (square or flat version)**	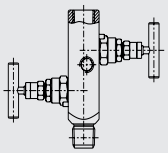	Vent connections (if available) point to the rear. All T-handles, for safety reasons, will be supplied in fully closed position.
Models IV3, IV5 **Valve manifold (only for differential pressure measuring instruments)**	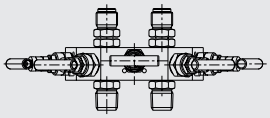	Orientation is determined by the threaded connections of both process connections on the differential pressure measuring instrument and the arrow marking on the valve manifold.
Model 910.15 **Syphon**	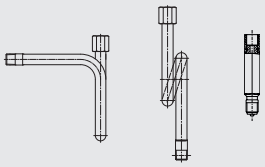	■ U-form: process connection points to the rear ■ Trumpet form: upper half of the pipe loop runs forward ■ Compact form: with fixed connection thread or LH-RH adjusting nut
Connecting flange or model IVM monoflange	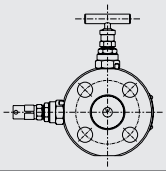	Flanges (if available) are the first accessory component on the process side. A flange-mounting of the complete mounting arrangement to the application is thus enabled.

Mounting instructions

The assembly of all components is made in compliance with the specified torques and positions. Each mounting point is sealed expertly. Depending on the connection threads and the temperature and pressure ranges, PTFE tape, stainless steel sealings and other sealing rings are used (for details, see WIKA model 910.17).
The forces required for mounting and dismounting of instrument hook-ups should be applied as close to the process side as possible. For the mounting and dismounting only the designated spanner flats are to be used to prevent mounting forces from damaging the instrument or valve body.

Parallel connection threads The sealing face ① is sealed with flat gasket, lens-type sealing ring or WIKA profile sealing, usually metallic. High-temperature resistant ceramic paste is normally used for thread lubrication. The sealing point is located before or after the thread.	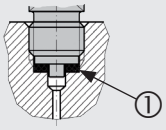 e.g. G ½ per EN 837	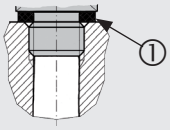 e.g. G ¼ per DIN 3852-E
Tapered connection threads The thread is wrapped with sealing material (e.g. PTFE tape). The sealing point is located in the thread.	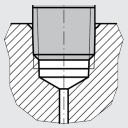 e.g. ½ NPT	

For instrument hook-ups of oxygen applications, only tested sealants and lubricants can be used. For hazardous areas, either conductive sealants and lubricants are used or the mounting arrangement offers additional possibilities for equipotential bonding (e.g. weld spots or fuse plates).

Leak test

In line with EN 12266-1:2003, each sealing point will be 100 % tested with leak detection spray under standard test pressure. At leaking points, after the application of the leak detection spray, bubbles become visible. The bubble detection method can detect leakage rates of approx. $1 \cdot 10^{-3}$ mbar l/s.
For critical applications, further tests are carried out, depending on the complexity of the instrument hook-up.
Besides the bubble detection method with leak detection spray, WIKA also uses the pressure drop method or determination of leakage rates with helium. In accordance with the EN 1779 (test gas method B4 and B6) leak testing standard, leakage rates of better than $1 \cdot 10^{-6}$ mbar · l/s can be detectable with helium.

Further information

For the selection, installation and operation of pressure gauges, see technical information IN 00.05.

© 11/2015 WIKA Alexander Wiegand SE & Co. KG, all rights reserved.
The information provided in this document corresponds to the current state of the art and may vary slightly depending on the production site.
The information provided is for general information purposes only and is not legally binding. We reserve the right to make changes in individual cases or special versions.
In csae of a different interpretation of the translated and the English data sheet, the English wording shall prevail.

WIKA Alexander Wiegand SE & Co. KG
Alexander-Wiegand-Straße 30
63911 Klingenberg/Germany
Tel. +49 9372 132-0
info@wika.de
www.wika.com

Notes on equipment protection per IEC/EN 60529 and NEMA For Bourdon tube or diaphragm pressure gauges

General information

This technical information describes the measures to prevent both the formation of condensation within a hermetically sealed case, and also the intrusion of water into cases vented to the atmosphere. These measures apply both to Bourdon tube pressure gauges and to diaphragm pressure gauges.

1. Introduction and explanation of physical conditions

The formation of condensation in the cases of hermetically sealed, unfilled instruments cannot generally be avoided. This is based on the physical fact that the humidity found in air, under particular conditions, settles on cold surfaces as condensation. The warmer the air, the more humidity it can hold. If the air cools (e.g. at the window of a measuring instrument), then the air can only hold a small amount of humidity. The excess humidity settles as condensation on the window.

In addition, water in the form of splash, jet and rain water from outside can intrude into the case, so long as the instrument is vented to atmosphere.

2. Explanation of the degrees of protection per IEC/EN 60529

Degrees of protection against solid foreign bodies, defined by the first index number

First index number	Degree of protection	
	Code designation	Definition
0	Not protected	–
1	Protected against solid foreign bodies of 50 mm diameter and larger	The object probe, a round body of 50 mm diameter, must not fully intrude [1)]
2	Protected against solid foreign bodies of 12.5 mm diameter and larger	The object probe, a round body of 12.5 mm diameter, must not fully intrude [1)]
3	Protected against solid foreign bodies of 2.5 mm diameter and larger	The object probe, 2.5 mm in diameter, must not intrude at all [1)]
4	Protected against solid foreign bodies of 1.0 mm diameter and larger	The object probe, 1.0 mm in diameter, must not intrude at all [1)]
5	Dust protected	Ingress of dust is not completely prevented, but dust may not intrude in a such a quantity that the satisfactory operation of the instrument or safety is impaired
6	Dust-proof	No ingress of dust

1) The full diameter of the object probe must not pass through any opening in the case.

Illustration 1
Source: IEC/EN 60529

Smart in sensing

Degrees of protection against water, defined by the second index number

Second index number	Degree of protection	
	Code designation	Definition
0	Not protected	–
1	Protected against dripping water	Perpendicularly falling drops must have no damaging effects.
2	Protected against dripping water when the case is inclined to 15°.	Perpendicularly falling drops must have no damaging effects, when the case is inclined to an angle of up to 15°, either side of perpendicular.
3	Protected against sprayed water	Water that is sprayed at an angle of up to 60°, either side of perpendicular, must have no damaging effects.
4	Protected against splash water	Water that splashes against the case from any direction must have no damaging effects.
5	Protected against water jets	Water that splashes against the case, as a jet, from any direction, must have no damaging effects.
6	Protected against strong water jets	Water that splashes against the case, as a strong jet, from any direction, must have no damaging effects.
7	Protected against the effects of temporary immersion in water	Water must not enter in any quantity which could cause damage, when the case, under standardised pressure and temperature conditions, is temporarily immersed in water.
8	Protected against the effects of permanent immersion in water	Water must not enter in any quantity which could cause damage, when the case is permanently immersed in water, under conditions which must be agreed between the manufacturer and user. The conditions must, however, be more demanding than those for the index number 7.

Illustration 2

Source: IEC/EN 60529

Example: Ingress protection IP65

- First index number 6: Dust-proof, no ingress of dust
- Second index number 5: Protected against water jets: Water that splashes against the case as a jet from any direction must have no damaging effects.

3. Comparison of NEMA (National Electrical Manufacturers Association) and IEC/EN 60529

NEMA ingress protection Model number	IEC/EN 60529 ingress protection Classification
1	IP10
2	IP11
3	IP54
3 R	IP14
3 S	IP54
4 and 4 X	IP66
5	IP52
6 and 6 P	IP67
12 and 12 K	IP52
13	IP54

Illustration 3

4. Measures against the formation of condensation

Different fill fluids depending on the ambient temperature and the electrical conductivity

In order to avoid the formation of condensation in the case, WIKA recommends filling the instruments with glycerine. For contact gauges, the filling can be made with silicone oil, since silicone oil, unlike glycerine, is not hygroscopic and therefore prevents a short-circuit within the instrument.

If the ambient temperature drops below -20 °C, then we recommend that the instrument absolutely must be filled with silicone oil. Even at temperatures down to -50 °C, silicone oil can still be used due to its low viscosity.
For flammable and/or explosive media, e.g. oxygen, inert fill fluids must be used.

5. Hermetically sealed instruments and effects associated with them

In order to prevent the intrusion of water into the case, it is recommended that an ingress protection method is chosen that reliably inhibits this (see illustrations 1 and 2). The ingress protection demands that the instrument is hermetically sealed.

With vented instruments, the vent valve has to be closed in order to achieve the specified ingress protection. This, however, produces a temperature error, which can affect the measuring result (see illustrations 4, 5 and 6). Therefore the vent valve has to be opened for a short time before reading the measured value.

5.1 Temperature errors in unfilled and filled Bourdon tube pressure gauges

A standard 232.50/30 instrument with a pressure range greater than 25 bar can be made hermetically sealed without any problems, and manufactured with an ingress protection of IP66. The temperature error that occurs with these instruments is negligible, since it is so small in relation to the pressure range, that the instrument still will operate within its specified class accuracy.

Instruments with a scale range of less than 25 bar can likewise be made hermetically sealed, though a temperature error will then be present (see illustration 4). The temperature errors present are shown in the following graphs.

Temperature errors in hermetically sealed, unfilled Bourdon tube pressure gauges

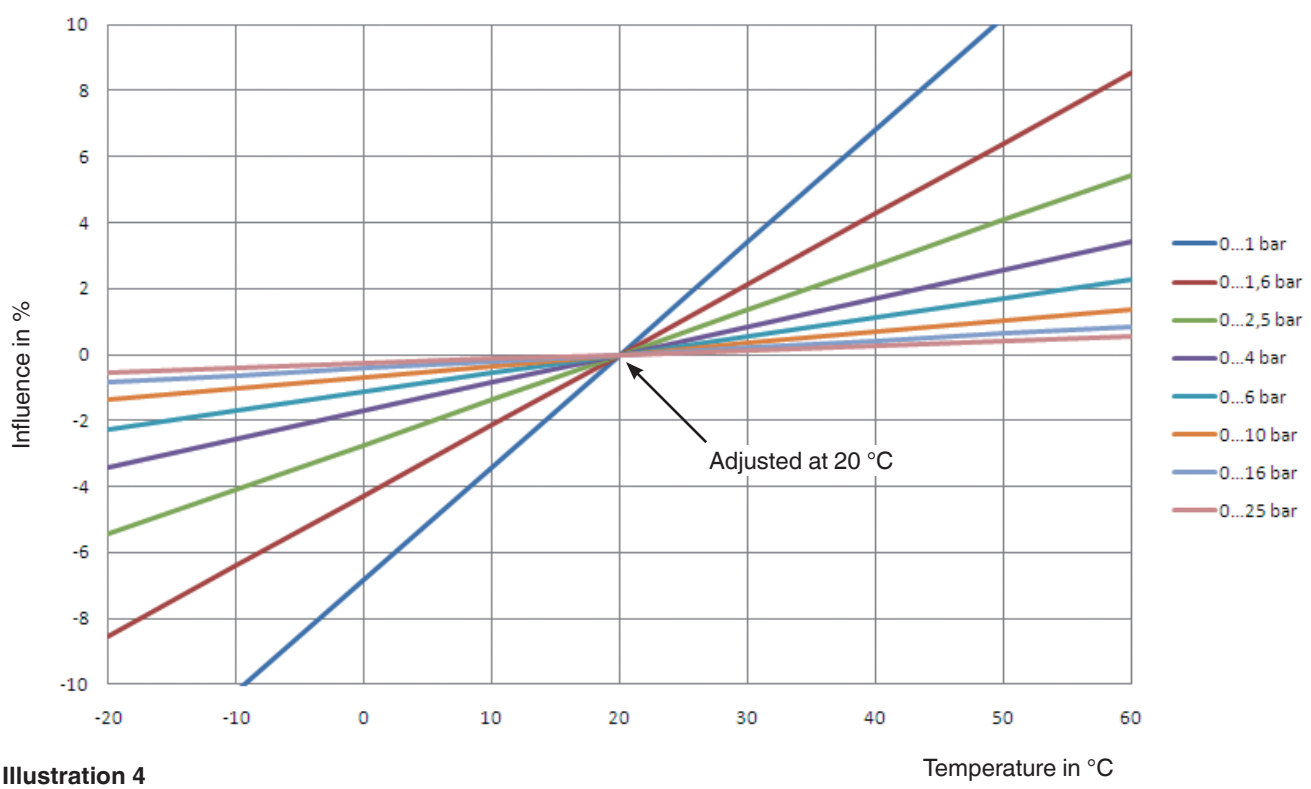

Illustration 4

Temperature errors in hermetically sealed, filled Bourdon tube pressure gauges

Filled to 90 % with glycerine

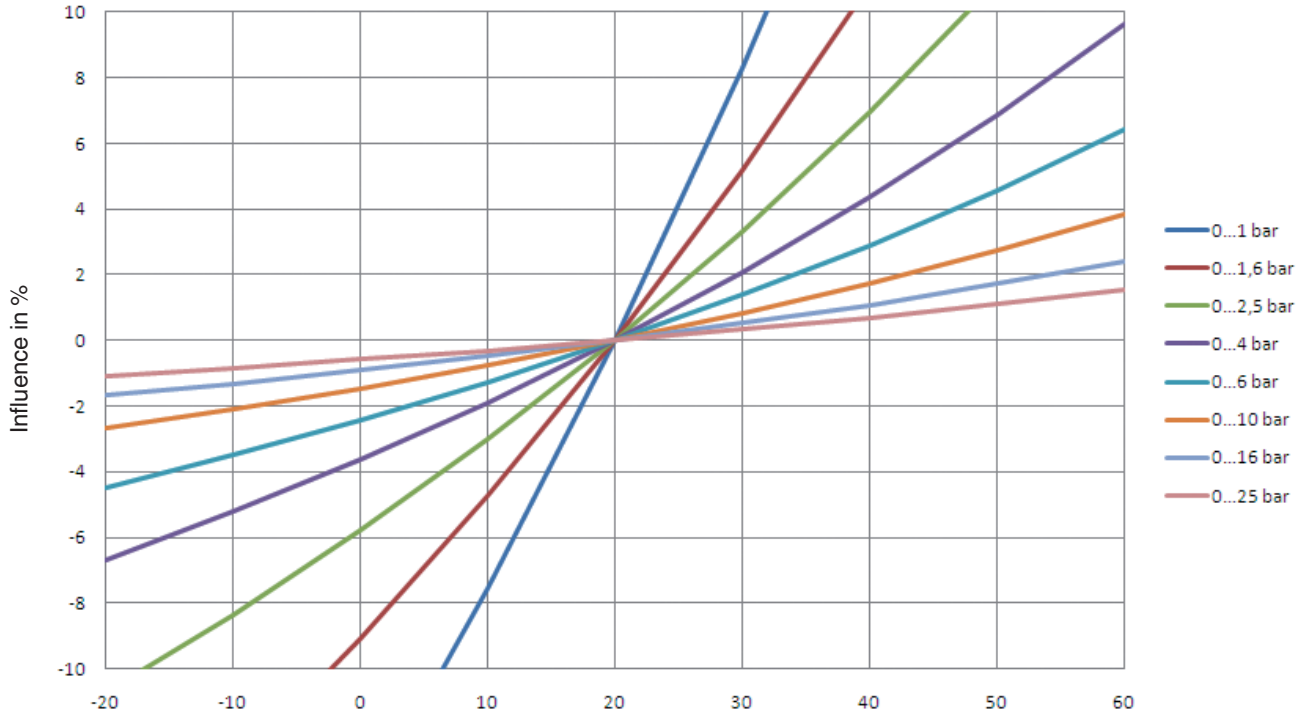

Illustration 5

Temperature in °C

Filled to 90 % with silicone oil

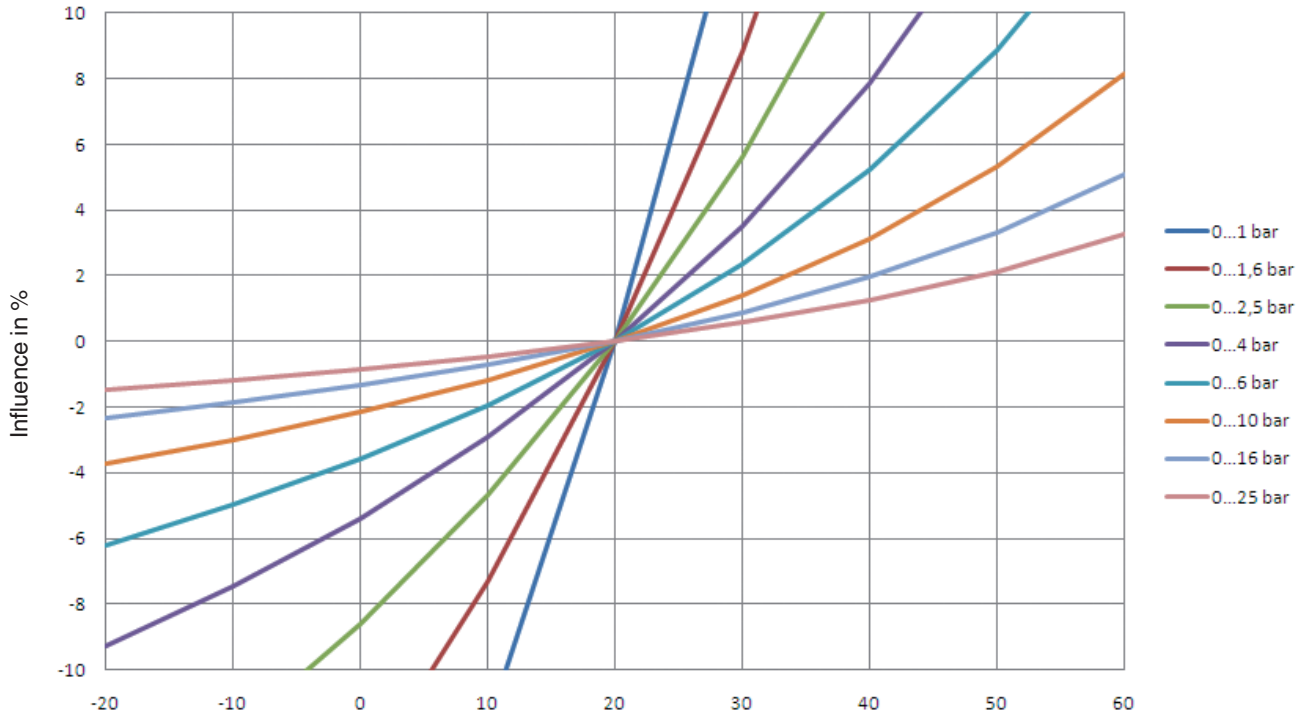

Illustration 6

Temperature in °C

5.1 Temperature errors in unfilled and filled diaphragm pressure gauges

With model 4, 5 and 7 hermetically sealed diaphragm pressure gauges, the temperature error for scale ranges ≥ 100 mbar is negligible. For scale ranges < 100 mbar we recommend only using instruments with a pressure compensating diaphragm.

For instrument models 7xx.14, DPG40, DPGS40, DPGS40TA, DPGT40, DPS40, 700.01/02 and 7x2.15, due to their mechanical design, there are no additional temperature errors.

5.3 Model overview

Pressure gauges for which the formation of condensation and the ingress of water from the outside can be prevented:

Influence	Bourdon tube pressure gauges					Diaphragm pressure gauges					
	Model 2 unfilled		Model 2 filled		Model 233.30 filled, with pressure compensating diaphragm	Model 4 and 7 unfilled		Model 4 and 7 filled		Model 4 and 7 unfilled, with pressure compensating diaphragm	Model 4 and 7 filled, with pressure compensating diaphragm
	≥ 25 bar	< 25 bar	≥ 25 bar	< 25 bar	all pressure ranges	> 100 mbar	< 100 mbar	> 100 mbar	< 100 mbar	all pressure ranges	all pressure ranges
Formation of condensation	unavoidable		✓	✓	✓	unavoidable		✓	✓	unavoidable	✓
Hermetically sealed [1]	Influence negligible	For influence see illustration 4	Influence negligible	For influence see illustration 5 or 6	✓	Influence negligible	Technically not solvable	Influence negligible	Technically not solvable	✓	✓

1) Hermetically sealed = air-tight case

Illustration 7

6. Pressure compensating diaphragm

As can be seen in illustration 7, formation of condensation in filled pressure gauges can be prevented by the use of pressure compensation diaphragms, without any temperature error. Pressure compensation diaphragms can be used for all safety pressure gauges per EN 837-1 S3.

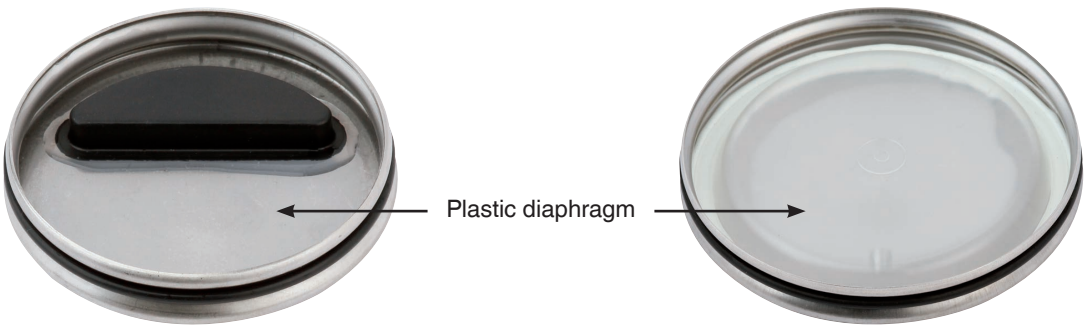

Illustration 8: Rear wall of case with pressure compensating diaphragm, nominal size 63

Illustration 9: Rear wall of case with pressure compensating diaphragm, nominal size 100

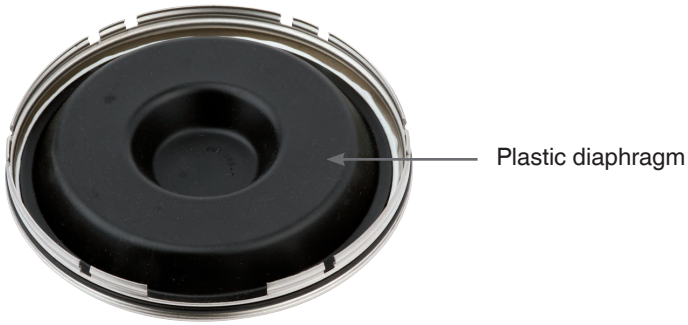

Illustration 10: Rear wall of case with pressure compensating diaphragm for contact gauges, nominal size 160

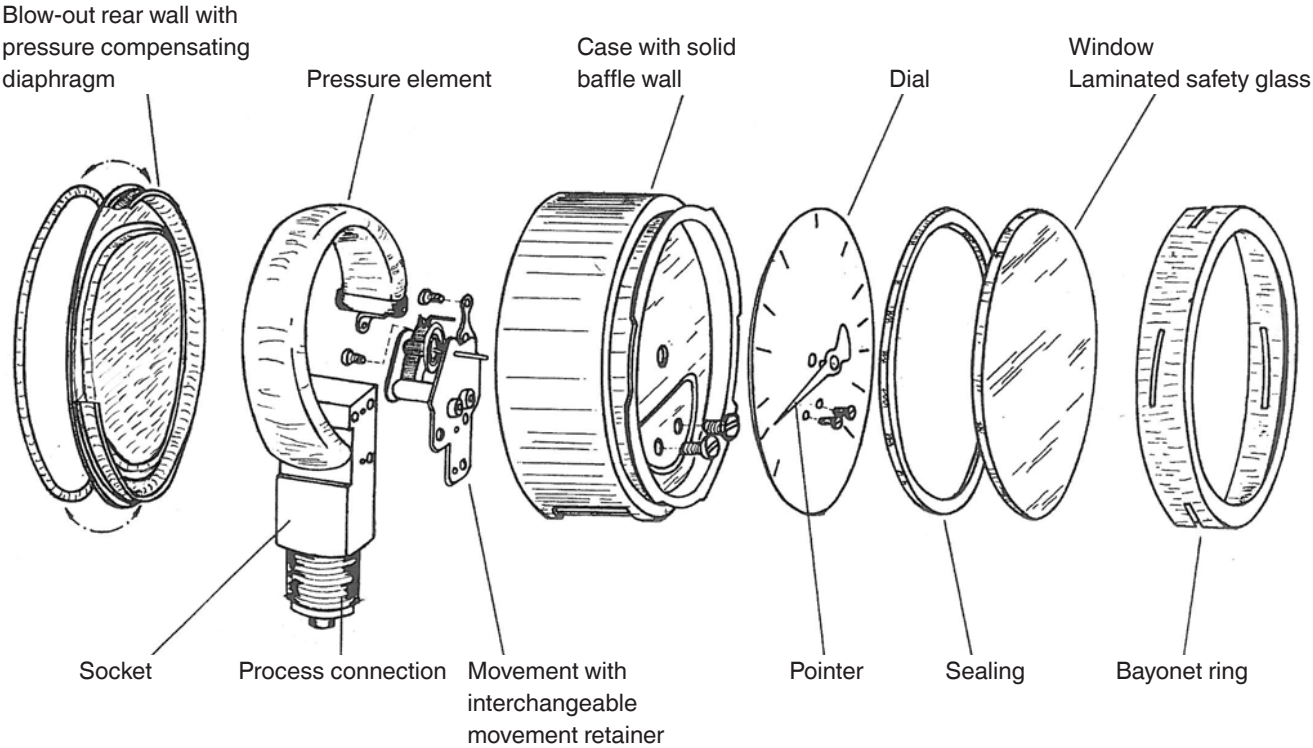

Illustration 11: Exploded view drawing

© 09/2010 WIKA Alexander Wiegand SE & Co. KG, all rights reserved.
The specifications given in this document represent the state of engineering at the time of publishing.
We reserve the right to make modifications to the specifications and materials.

WIKA Alexander Wiegand SE & Co. KG
Alexander-Wiegand-Straße 30
63911 Klingenberg/Germany
Tel. +49 9372 132-0
info@wika.de
www.wika.de

WIKA standard documentation

Requirements

Extensive processes require detailed documentation. For complex operations, data sheets and operating instructions are not sufficient anymore as documents accompanying the products.
Additional documents such as certificates, analyses or quality management procedures provide exact proof that the instruments are ideally suited for the particular application. In this way a detailed documentation conforming to the law contributes to plant safety.

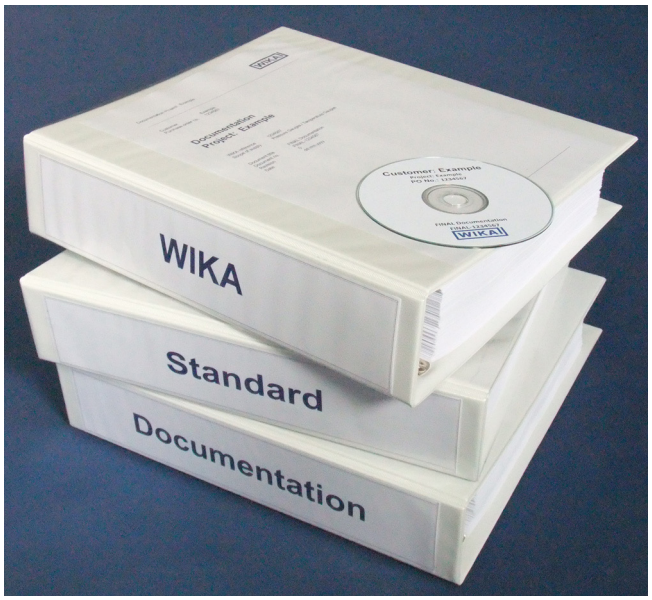

WIKA standard documentation

WIKA standard documentation

The WIKA standard documentation complies with the legal conditions of acceptance (in paper format and/or as a navigable CD-ROM).
Our individual documents are constantly updated. They are subject to the “product lifecycle” (further development of the existing product). A unique attribution of the documents to the production order at the time of manufacture is ensured. WIKA provides these documents in many languages and in the desired quantity.

Customer-specific designs
Of course we can also provide the documentation according to your requirements:

- Customer logo
- Cover sheet layout
- Ring binders
- Sequence
- Further documents

Table of Contents

Part of your business

WIKA standard documentation

This contains following documents:

Abbreviation	Description
TAG	Item list (Tag no. list)
CATL	Data sheets (catalogues)
IOM	Operating instructions (installation, operation and maintenance)
DOC	Declaration of conformity (EC, ATEX, EMC, PED)
ZGN	Certificates/Test reports
WFC	Wake frequency calculation (optional)
FLC	Flow calculation (optional)

These documents can be provided additionally:

Abbreviation	Description
DRWG	Drawings
QM	Quality management procedures
QT	Quality test procedures
CSP	Commissioning spare parts list
2SP	2 years spare parts list
NDE	Non-destructive examinations
SIP/RPP	Transport, packaging and storage instructions
MCOC	Manufacturer‘s certificates of compliance
PASS	Passport (import permit for instruments destined for Russia)

© 2013 WIKA Alexander Wiegand SE & Co. KG, all rights reserved.
The specifications given in this document represent the state of engineering at the time of publishing.
We reserve the right to make modifications to the specifications and materials.

10/2013 GB

WIKA Alexander Wiegand SE & Co. KG
Alexander-Wiegand-Straße 30
63911 Klingenberg/Germany
Tel. +49 9372 132-0
Fax +49 9372 132-406
info@wika.de
www.wika.de

General information about NACE standards
For sour gas applications with WIKA products

General information

This technical information refers to two publications in the area of material requirements. Here MR stands for "**M**aterial **R**equirements".

- NACE [1] MR0175
  "Petroleum and natural gas industries. Material for use in H_2S-containing environments in oil and gas production."
- NACE [1] MR0103
  "Materials resistant to sulphide stress cracking in corrosive petroleum refining environments."
- Only for pressure gauges, pressure transmitters, diaphragm seals and thermowells

Fig. left: Bourdon tube pressure gauge model 232.30
Fig. right: Diaphragm seal, flange connection model 990.27

Description

Natural gas and crude oil, as raw materials, contain greater or lesser high levels of hydrogen sulphide (H_2S). If there is a minimum amount of H_2S and a minimum total pressure, such a mixture is recognised as “sour gas” or “sour oil”.

Both standards describe the corrosion properties of metals in the presence of H_2S under different corrosion mechanisms. Firstly, hydrogen-induced stress cracking corrosion is considered. This is greatest at room temperature and is the focus of MR0103. A typical application for this standard is downstream processing in a refinery.
Secondly, chlorine-induced stress cracking corrosion under the influence of H_2S is considered. This is aided at higher temperatures and is described by NACE MR0175. A typical application is the production of oil and gas.

1) The term **“NACE”** refers to an organisation (**N**ational **A**ssociation of **C**orrosion **E**ngineers), which primarily deals with any form of corrosion. The results of their work are published in many publications as NACE standards and updated regularly. The headquarters of this organisation is in Houston, Texas/USA.

Application example:
Pressure transmitter models E-10 and E-11

Thermowells in various design

WIKA
Part of your business

The NACE MR0175 standard is represented in the ISO 15156 standard (part 1 - 3) internationally valid. This deals with technical issues regarding corrosion of materials during the extraction and processing of natural gas and crude oil. The ISO 15156 standard, Part 3, describes the use of corrosion-resistant metals and complies with to NACE MR0175.

NACE MR0175
NACE MR0175 (ISO 15156-3) describes, according to the application, for the various material groups, the relevant requirements for each individual material and the maximum permissible temperature limits (see table).

NACE MR0103
This standard is similarly constructed and can also be implemented for WIKA products if a customer wishes. It defines the material requirements and temperature limits for applications in refineries.

Material selection

In sour gas applications, the corrosion properties of metals depend on the environmental conditions (pH value, chloride content, H_2S concentration and temperature limits) and the maximum strength of the materials. For different materials there are different strength requirements.

In accordance with the standard, ISO 15156-1/section 5 “General principles”, it is the responsibility of the user to specify which material is suitable for the application.

With knowledge of the above-mentioned environmental conditions, WIKA can make recommendations on the selection of materials.

If the details of the environmental conditions are not adequately known, WIKA specifies the operating conditions for ISO 15156-3 under the assumption of critical environmental conditions.
On this basis, therefore, only the lowest maximum process temperature can be confirmed.

Example:
For nickel-based alloys such as HC276, in a work-hardened condition, without knowledge of the environment conditions, a maximum temperature of 132 °C will apply, whereby, at a given partial pressure of H_2S of less than 200 kPa, a maximum temperature of 232 °C would be possible.

Generally, with its products, WIKA fulfills the strength requirements (maximum hardness) of materials. Exceptions are the elements of mechanical pressure gauges. Here, due to their elastic properties, higher strength is required. WIKA has demonstrated in detail the suitability of its Bourdon tube measuring system in accordance with ISO 15156-3 through independent laboratory testing up to 120 °C.

The following table gives an example-based overview of the lowest maximum operating temperatures by material and product group per “Any equipment and component” in accordance with ISO 15156-3/NACE MR0175.

Product group	Stainless steel 316L	Monel 400	Duplex 1.4462	Alloy C276	Elgiloy 2.4711
Mechanical pressure measuring instruments	max. 120 °C [1]	no limit	n/a	n/a	n/a
Electronic pressure measuring instruments	n/a	n/a	n/a	n/a	no limit [3]
Diaphragm seal	no limit [2]	no limit	max. 232 °C	max. 132 °C	n/a
Thermowells	no limit [2]	no limit	max. 232 °C	max. 132 °C	n/a

1) Measured using laboratory testing
2) Classified using “Instrumentation and control device”: as of 2009
3) Classified using “Diaphragms, pressure diaphragms, pressure measuring devices and pressure seals”

Even if the NACE standard has no temperature limit, the product-specific details, which can limit the maximum operating temperature, should be considered.

General information

Welding
The welding processes (WPS/PQR) are qualified in accordance with the appropriate standards (AD 2000 or ASME). One element of the welding procedure tests is hardness testing of the weld seam. A retrospective verification of the hardness on the welded product is not prescribed by the NACE standards for cracking-resistant alloys.

Heat treatment following welding
Heat treatment (PWHT) is not mandatory. For certain materials (e.g. carbon steel) heat treatment can be required due to technical considerations of the welding.

Hardness values on semifinished product
A proof of the hardness values of the semi-finished products is made via the supplier's 3.1 acceptance test certificate (except for stainless steel Bourdon tubes and NiCrCo alloy 2.4668 (Inconel 718) diaphragm elements).

© 05/2012 WIKA Alexander Wiegand SE & Co. KG, all rights reserved.
The specifications given in this document represent the state of engineering at the time of publishing.
We reserve the right to make modifications to the specifications and materials.

WIKA Alexander Wiegand SE & Co. KG
Alexander-Wiegand-Straße 30
63911 Klingenberg/Germany
Tel. +49 9372 132-0
Fax +49 9372 132-406
info@wika.de
www.wika.de

Instrument mounting
Mounting flanges, panel cutouts

Mounting flanges

Circular housing, without electrical accessories

Front mounting flange for panel mounting

NS	Recommended panel cutout [1]
40	Ø 44 ±0.3 mm
50	Ø 54 ±0.3 mm
63	Ø 67 ±0.3 mm
80	Ø 84 ±0.3 mm
100	Ø 104 ±0.5 mm
160	Ø 164 ±0.5 mm
250	Ø 254 ±0.5 mm

1) With back mount connection

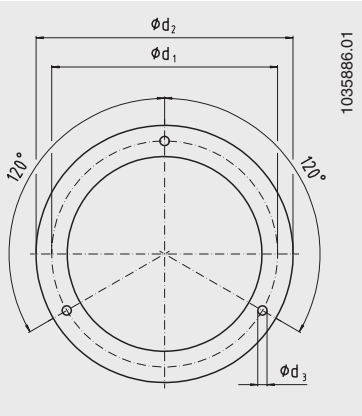

Triangular bezel for panel mounting

NS	Recommended panel cutout [1]
40	Ø 41.5 +0.5 mm
50	Ø 51 ±0.5 mm
63	Ø 64.5 +0.5 mm
80	Ø 82 ±1 mm
100	Ø 102 +1 mm
160	Ø 162.6 +1 mm

1) With back mount connection

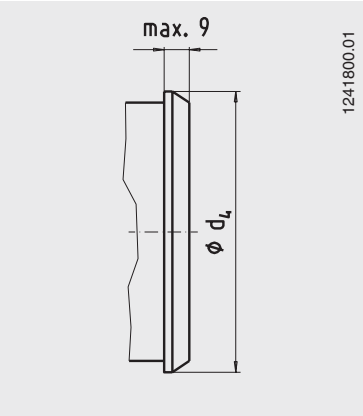

Rear mounting flange for surface mounting [2]

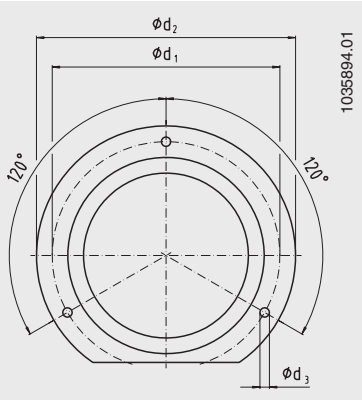

Nominal size	Dimensions in mm d_1	d_2	d_3	d_4 max.
40	51	61	3.6	44
50	60	71	3.6	55.5
63	75	85	3.6	69
80	95	110	4.8	88
100	117	132	4.8	108
160	178	196	5.8	168
250	270	285	5.8	-

2) For some models this is achieved through three mounting lugs

Panel cutout in accordance with DIN 43700

Square and rectangular housings

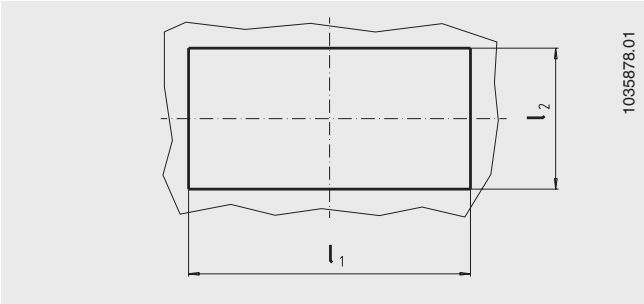

Nominal size	Dimensions in mm l_1	Permissible tolerance	l_2	Permissible tolerance
48 x 24	45	+0.6	22.2	+0.3
72 x 36	68	+0.7	33	+0.6
72 x 72	68	+0.7	68	+0.7
96 x 96	92	+0.8	92	+0.8
144 x 72	138	+1.0	68	+0.7
144 x 144	138	+1.0	138	+1.0

Smart in sensing

Panel mounting flange

Circular housing, with electrical accessories

Lugs on housing
(for securing in the panel)

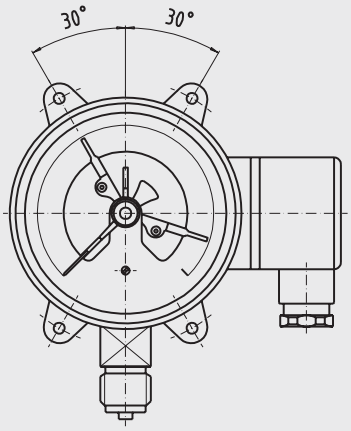

1294687.01

Corresponding mounting ring
(to cover the panel cutout)

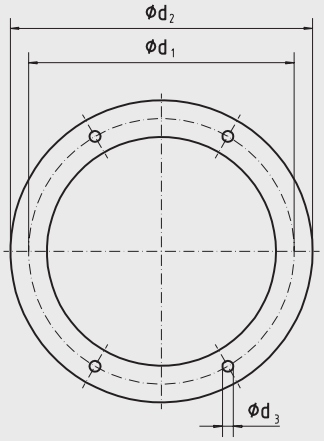

1294687.01

Nominal size	Dimensions in mm			
	d_1	d_2	d_3	Panel cutout Ø
100	116	132	4.8	105
160	178	196	5.8 [1]	165

1) Mounting lugs with M5 internal thread

Mounting principle with front mounting flange

with electrical accessories

NS 100

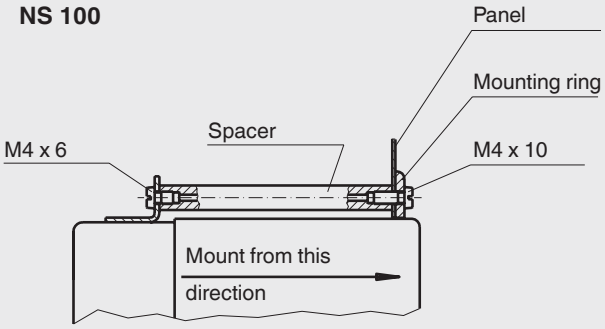

1294695.01

Delivered package includes:
- Mounting ring
- 4 spacers
- 8 screws, M4 x 10

NS 160

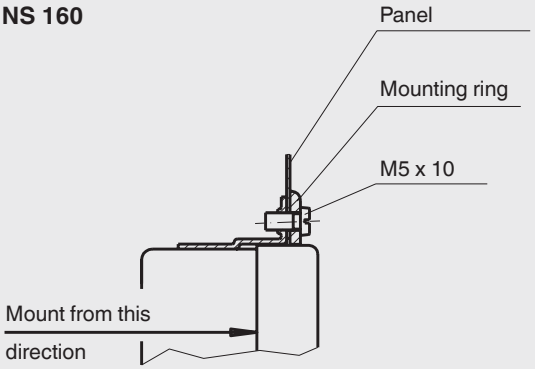

1294709.01

Delivered package includes:
- Mounting ring

Additionally required
- 4 screws, M5 x 10

Note: In addition to this overview, model-specific mounting drawings are available on request.

© 2008 WIKA Alexander Wiegand SE & Co. KG, all rights reserved.
The specifications given in this document represent the state of engineering at the time of publishing.
We reserve the right to make modifications to the specifications and materials.

04/2012 GB

WIKA Alexander Wiegand SE & Co. KG
Alexander-Wiegand-Straße 30
63911 Klingenberg/Germany
Tel. (+49) 9372/132-0
E-mail info@wika.de
www.wika.de

Process connection per EN 837

Applications

- For the definition of the process connections for WIKA pressure measuring instruments

Variants

- Process connections with parallel thread
- Process connections with tapered thread
- Industry-specific special connections

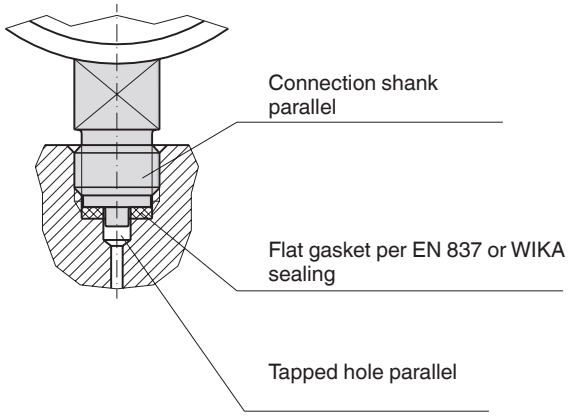

Installation example with parallel thread

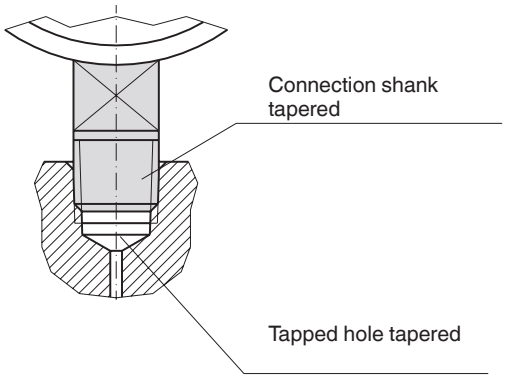

Installation example with tapered thread

Description

WIKA offers pressure measuring instruments with a variety of process connections in order to meet diverse customer-specific application requirements.

For pressure measuring instruments with parallel or tapered thread, process connections with a range of dimensions are specified.

The permissible maximum pressure of a process connection is a result of the combination of thread size and material. The correlation is illustrated for a selection of representative process connections in a table on page 3.

Smart in sensing

Connection shank with parallel male thread

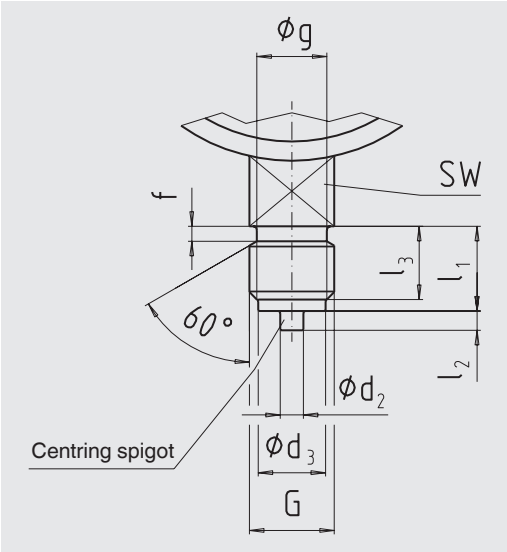

Parallel thread G	Dimensions in mm							
	d2	d3	f with Brass	Stain-less steel	g -0.2	l_1 +0.3	l_2 ±0.1	l_3 +0.3
G ⅛ 1)	2)	8	2)	2)	2)	10	2)	8
M10 x 1	2)	8	2)	2)	2)	10	2)	8
G ¼ 1)	5	9.5	2	3	11	13	2	11
M12 x 1.5	5	9.5	2	3	9.7	13	2	11
G ⅜	5.5	13	2	3	14.5	16	3	13
G ½ 1)	6	17.5	3	4	18	20	3	17
M20 x 1.5	6	17.5	3	4	17.7	20	3	17

1) Preferably with WIKA standard versions
2) With WIKA, without centring spigot; thread run-out instead of thread undercut

Connection shank with tapered thread

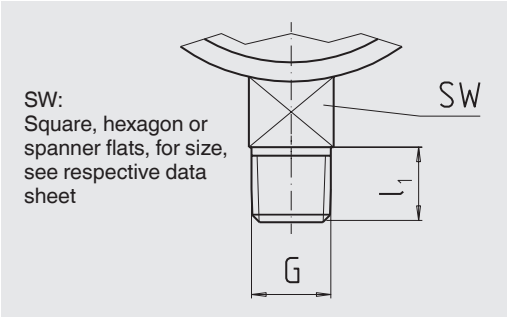

Tapered thread G	Dimensions in mm l_1 min.
⅛ NPT, R ⅛	10
¼ NPT, R ¼	13
⅜ NPT, R ⅜	15
½ NPT, R ½	19

Tapped hole with parallel female thread

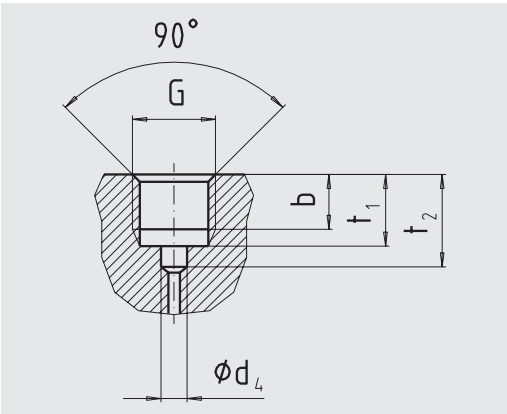

Parallel female thread G	Dimensions in mm			
	b min.	d_4	t_1 -0.5	t_2 min.
G ⅛ 1)	7.5	4.4 3)	10	13
M10 x 1	7.5	4.5 3)	10	13
G ¼ 1)	10	5.5	13	16.5
M12 x 1.5	9.5	5.5	13	16.5
G ⅜	12	6.5	16	19.5
G ½ 1)	15	7	19	24.5
M20 x 1.5	15.5	7	19	24.5

1) Preferably with WIKA standard versions
3) Can be omitted with WIKA instruments since without centring spigot

Standards for threads

Parallel threads:	Pipe threads, code G, per ISO 228-1 Metric ISO threads, code M, per DIN 13
Tapered threads:	Pipe threads, code NPT, per ANSI / ASME B1.20.1 Pipe threads, code R, per ISO 7

Maximum allowable pressure

Thread [1]	Maximum allowable pressure [2]					
	Cu alloy		Stainless steel		Monel®	
	bar	psi	bar	psi	bar	psi
G ⅛	400	6,000	400	6,000	400	6,000
G ¼	600	8,600	1,000	15,000	1,000	15,000
G ⅜	600	8,600	1,000	15,000	1,000	15,000
G ½	1,000	15,000	2,500	36,000	2,500	36,000
M10 x 1	400	6,000	400	6,000	400	6,000
M12 x 1.5	400	6,000	400	6,000	400	6,000
M20 x 1.5	1,000	15,000	2,500	36,000	2,500	36,000
⅛ NPT, R ⅛	400	6,000	400	6,000	400	6,000
¼ NPT, R ¼	600	8,600	1,000	15,000	1,000	15,000
⅜ NPT, R ⅜	600	8,600	1,000	15,000	1,000	15,000
½ NPT, R ½	1,000	15,000	1,600	23,000	1,600	23,000
7/16-20 UNF	400	6,000	800	12,000	800	12,000

1) Valid for the thread standards for connection shanks and female threads mentioned on page 2.
2) The specified values for the maximum pressure are rounded values and are assigned to the nearest standard scale range.

Examples of industry-specific process connections

Hydraulic connection with 74° sealing cone SAE J 514

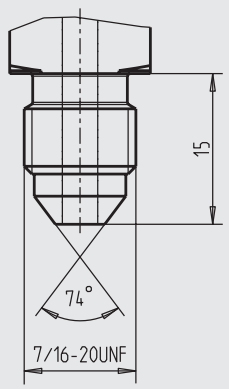

Refrigeration connection with 90° sealing cone SAE J 513

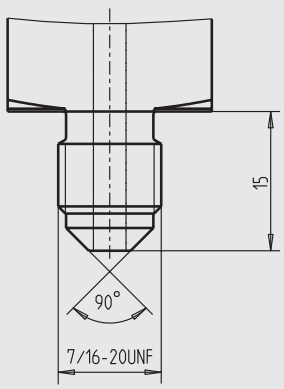

High-pressure process connection per Autoclave Engineering or Nova Swiss M16 x 1.5 female

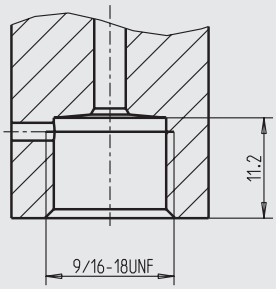

High-pressure process connection (HP) for connection with lens-type sealing ring, per EN 837

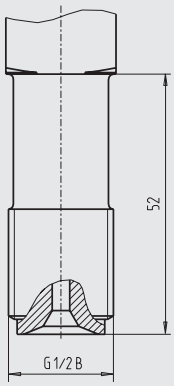

Hose connection

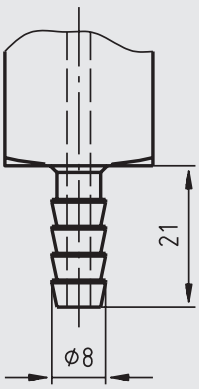

Other process connections on request

Examples of other tapped holes

Version per DIN EN ISO 1179-2 (sealing with profile sealing)

G ¼

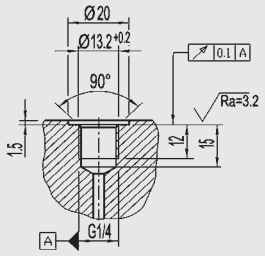

G ½

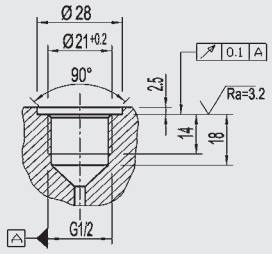

G 1 ½ [1]
Order number: 2158982

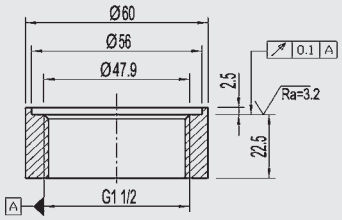

M12 x 1.5

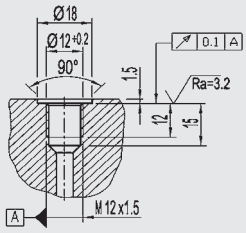

M14 x 1.5

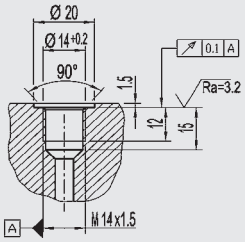

M18 x 1.5

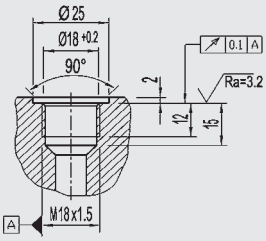

Version per ANSI / ASME B1.20.1

¼ NPT

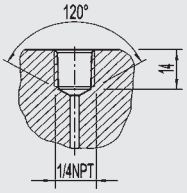

½ NPT

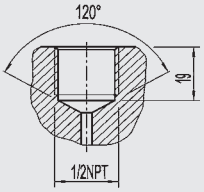

Version per SAE J 514

7/16-20 UNF

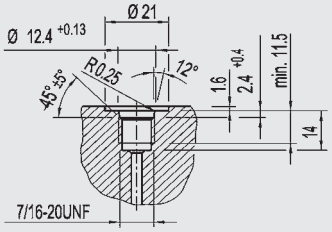

Flush WIKA version

G ¼, with O-ring [2]

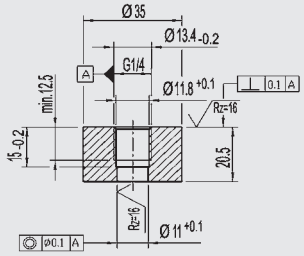

G ½, with O-ring [1] [2]

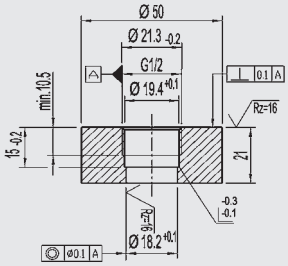

G 1, with O-ring [1] [2]
Order number: 1192264
G 1, with sealing cone
Order number: 1524380

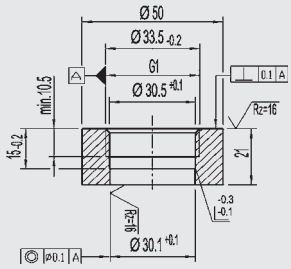

G 1, EHEDG [1] [2] [3]
Order number: 2166011

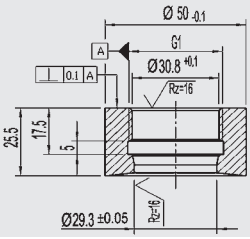

1) Also available as welding socket from WIKA.
2) The screw-in holes made by the customer must be drilled out after thread cutting.
3) European Hygienic Engineering & Design Group

WIKA makes every effort to ensure that the screw-in holes shown are kept up-to-date. The corresponding current regulations are applicable for the production of the screw-in hole.
We reserve the right to make technical changes to the WIKA versions for screw-in holes and welding sockets.

© 09/2000 WIKA Alexander Wiegand SE & Co. KG, all rights reserved.
The specifications given in this document represent the state of engineering at the time of publishing.
We reserve the right to make modifications to the specifications and materials.

WIKA Alexander Wiegand SE & Co. KG
Alexander-Wiegand-Straße 30
63911 Klingenberg/Germany
Tel. +49 9372 132-0
info@wika.de
www.wika.de

Scale ranges of pressure gauges
Scale mark spacing and numbering of the scale per EN 837

General information

Scale range, nominal size (NS, case diameter) and accuracy class of a pressure gauge determine the design of the scale. In the European EN 837-1 and EN 837-3 standards, the specifications about the layout of dials with concentric scales are contained.
In addition to the scales in accordance with EN 837, all internationally common scale ranges, double and multiple scales, coloured scales etc. are, of course, also available.

Scale ranges of EN 837

The preferred pressure unit is the bar.

Scale ranges for pressure in bar				
0 ... 0.6	0 ... 1	0 ... 1.6	0 ... 2.5	0 ... 4
0 ... 6	0 ... 10	0 ... 16	0 ... 25	0 ... 40
0 ... 60	0 ... 100	0 ... 160	0 ... 250	0 ... 400
0 ... 600	0 ... 1,000	0 ... 1,600		

Scale ranges for pressure in mbar			
0 ... 1	0 ... 6	0 ... 40	0 ... 250
0 ... 1.6	0 ... 10	0 ... 60	0 ... 400
0 ... 2.5	0 ... 16	0 ... 100	0 ... 600
0 ... 4	0 ... 25	0 ... 160	

For pressure gauges, the pointer turns anticlockwise with increasing vacuum.

Scale ranges for vacuum in bar			
-0.6 ... 0	-1 ... 0		

Scale ranges for vacuum in mbar			
-1 ... 0	-6 ... 0	-40 ... 0	-100 ... 0
-1.6 ... 0	-10 ... 0	-60 ... 0	-160 ... 0
-2.5 ... 0	-16 ... 0	-100 ... 0	-600 ... 0
-4 ... 0	-25 ... 0	-160 ... 0	

Scale ranges for pressure and vacuum in bar				
-1 ... +0.6	-1 ... +1.5	-1 ... +3	-1 ... +5	-1 ... +9
-1 ... +15	-1 ... +24			

Nominal sizes

For pressure measuring instruments, the following nominal sizes (NS) are defined:
NS 40, 50, 63, 80, 100, 160 and 250

Accuracy classes

The following table specifies the error limits at the reference temperature of 20° C.

Accuracy class	Error limits (percent of scale range)
0.1	± 0.1 %
0.25	± 0.25 %
0.6	± 0.6 %
1	± 1 %
1.6	± 1.6 %
2.5	± 2.5 %
4	± 4 %

For pressure gauges with a pointer stop, the accuracy class applies from 10 to 100 % of the scale range. For pressure gauges with a free zero point, the accuracy class applies from 0 to 100 % of the scale range.

Assignment of nominal size and accuracy class

NS	Accuracy class						
	0.1	0.25	0.6	1.0	1.6	2.5	4
40, 50					x	x	x
63				x	x	x	x
80				x	x	x	x
100				x	x	x	
160		x	x	x	x		
250	x	x	x	x	x		

Smart in sensing

Scale interval

The minimum number of scale divisions for each accuracy class and nominal size is given in the following table.

Scale (scale range)	Nominal size (NS)	Minimum number of scale divisions						
		Accuracy class						
		0.1	0.25	0.6	1	1.6	2.5	4
0 to 100	40					20	20	20
	50					20	20	20
	63				20	20	20	20
	80				50	50	50	50
	100			100	50	50		
	160		200	100 [1)]	50	50		
	250	500	200	100 [1)]	50	50		
0 to 160	40					32	32	32
	50					32	32	32
	63				32	32	32	32
	80				32	32	32	32
	100			80	32	32		
	160		160	80 [2)]	32	32		
	250	320	320	80 [2)]	32	32		
0 to 250	40					25	25	25
	50					25	25	25
	63				25	25	25	25
	80				50	50	50	50
	100			125	50	50		
	160		125	125	50	50		
	250	500	250	125	50	50		
0 to 400	40					20	20	20
	50					20	20	20
	63				20	20	20	20
	80				40	40	40	40
	100			80	40	40		
	160		200	200	40	40		
	250	400	200	200	40	40		
0 to 600	40					30	30	30
	50					30	30	30
	63				30	30	30	30
	80				60	60	60	60
	100			120	60	60		
	160		120	120	60	60		
	250	300	300	120	60	60		

1) Unless there is additional ordering information, WIKA manufactures these scales with 200 scale divisions
2) Unless there is additional ordering information, WIKA manufactures these scales with 160 scale divisions

See page 3 for pictorial examples of scale interval, various designs of the scale marks and the numbering of the scales at WIKA.

Additional information on this topic is given in the EN 837-1 and EN 837-3 standards.

The scale mark spacing is ≥ 1 mm.
The width of the scale marks is ≤ 1/5 of the scale mark spacing.

Examples for scale mark spacing and numbering of scales

Examples for accuracy class 1 to 4

Nominal size (NS)	Scale (scale range)	Scale mark spacing and numbering of the scale											Scale interval	Number of scale divisions
40														20
50														
63	0 ... 1	0		0.2		0.4		0.6		0.8		1	0.05	
	0 ... 10	0		2		4		6		8		10	0.5	
	0 ... 100	0		20		40		60		80		100	5	
	0 ... 1000	0		200		400		600		800		1000	50	
	-1 ... 0	-1		- 0.8		-0.6		-0.4		-0.2		0	0.05	
	-1 ... 0 ... +9	-1	0	1	2	3	4	5	6	7	8	9	0.5	
80														50
100														
160	0 ... 2.5	0		0.5		1		1.5		2		2.5	0.05	
250	0 ... 25	0		5		10		15		20		25	0.5	
	0 ... 250	0		50		100		150		200		250	5	
	0 ... 2500	0		500		1000		1500		2000		2500	50	
	-1 ... 0 ... +1.5	-1		-0.5		0		0.5		1		1.5	0.05	
	-1 ... 0 ... +24	-1	0		5		10		15		20	24	0.5	
80														60
100														
160	0 ... 0.6	0	0.1	0.2	0.3	0.4	0.5	0.6					0.01	
250	0 ... 6	0	1	2	3	4	5	6					0.1	
	0 ... 60	0	10	20	30	40	50	60					1	
	0 ... 600	0	100	200	300	400	500	600					10	
	-0.6 ... 0	-0.6	-0.5	-0.4	-0.3	-0.2	-0.1	0					0.01	
	-1 ... 0 ... +5	-1	0	1	2	3	4	5					0.1	

Examples for accuracy class 0.6

160										200
250	0 ... 4	0	0.5	1	3	3.5	4		0.02	
	0 ... 40	0	5	10	30	35	40		0.2	
	0 ... 400	0	50	100	300	350	400		2	
	0 ... 4000	0	500	1000	3000	3500	4000		20	
	-1 ... 0 ... +3	-1	-0.5	0	2	2.5	3		0.02	

Examples for accuracy class 0.25

250										320
	0 ... 1.6	0	0.1	0.2	1.3	1.4	1.5	1.6	0.005	
	0 ... 16	0	1	2	13	14	15	16	0.05	
	0 ...160	0	10	20	130	140	150	160	0.5	
	0 ... 1600	0	100	200	1300	1400	1500	1600	5	
	-1 ... 0 ... +0.6	-1	-0.9	-0.8	0.3	0.4	0.5	0.6	0.005	
	-1 ... 0 ... +15	-1	0	1	12	13	14	15	0.05	

© 08/2000 WIKA Alexander Wiegand SE & Co. KG, all rights reserved.
The specifications given in this document represent the state of engineering at the time of publishing.
We reserve the right to make modifications to the specifications and materials.

WIKA Alexander Wiegand SE & Co. KG
Alexander-Wiegand-Straße 30
63911 Klingenberg/Germany
Tel. +49 9372 132-0
info@wika.com
www.wika.com

Elastic element pressure gauges

Description

Indicating pressure gauges with elastic measuring elements are used extensively to measure pressure in technical applications due to their robustness and ease-of-use. They incorporate measuring elements which deform elastically under the influence of pressure. Mechanical pressure gauges are produced with bourdon tube, diaphragm, capsule and spring elements and are differentiated as a result of these.
The measuring elements are made of copper alloys, alloyed steels or, for specific measuring applications, produced in special materials. Pressures are only measurable in combination with a reference pressure. Atmospheric pressure usually serves as the reference pressure, and the pressure gauge therefore shows how much the measured pressure is higher or lower in relation to the given atmospheric pressure (i.e. an overpressure measuring instrument).
The pressure is indicated in standard measuring ranges over a 270 degree sweep on the dial. Liquid-filled pressure gauges, due to their damping effect, offer optimal protection against damage from high dynamic pressure loads or vibrations. By combination with limit signal indicators, switching can be carried out, while in combination with transmitters, electrical output signals (e.g. 4 ... 20 mA) can be used for industrial process automation.

Pressure gauges with bourdon tube

Bourdon tubes are circular-shaped tubes with an oval cross-section. The pressure of the media acts on the inside of this tube which results in the oval cross section becoming almost circular. Through the curvature of the tube, hoop stresses occur which bend the bourdon tube. The end of the tube, which is not fixed, moves, and this indicates the measurement for the pressure.

Through the pointer movement this motion is indicated on the display. The circular-shaped tubes, formed through an angle of approx. 250°, are used for pressures up to about 60 bar.

For higher pressures, bourdon tubes are used with either a number of superimposed coils of the same diameter (i.e. helical coils), or a spiral-shaped coil (i.e. spiral springs) in a single plane.

Bourdon tubes can only be protected against overload to a limited extent. In order to fulfil particularly harsh measuring tasks, the pressure gauge can be fitted with a chemical seal upstream as a separation or protection system.

The pressure ranges can be between 0 ... 0.6 and 0 ... 7000 bar with a reading accuracy (or class) from 0.1 to 4.0 %.

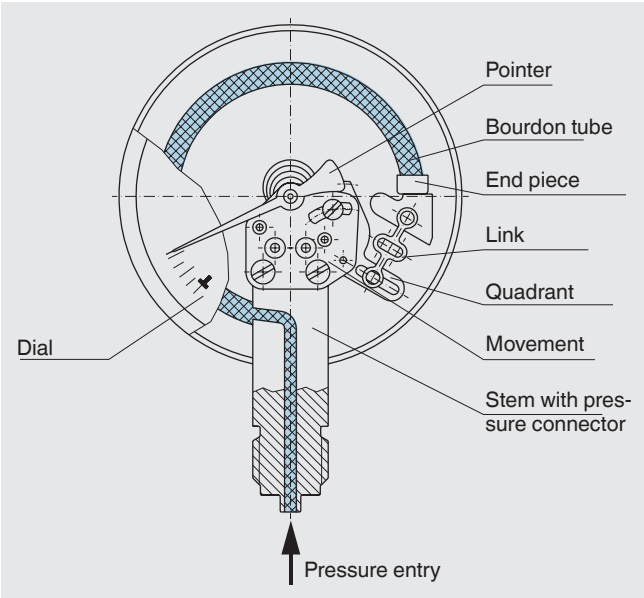

Fig. Pressure gauges with bourdon tube

Smart in sensing

Pressure gauges with diaphragm elements

Diaphragm elements are circular-shaped, corrugated membranes. They are either clamped around their rim between two flanges or welded and are subjected to the pressure of the media acting on one side. The deflection caused by this is used as a measurement for the pressure and is indicated by a pointer.

In comparison with bourdon tubes, these diaphragm elements have a relatively high actuating force and, as a result of the annular clamping of the element, they are insensitive to vibration.

The diaphragm element can be subject to higher overload through the load take-up (diaphragm element resting against the upper flange), and by coating it with special material or covering it with foil, the gauge can be protected against extremely corrosive media.

For measurements with highly viscous, impure or crystallizing media, wide connection ports, open connection flanges and purging capabilities can be integrated.

Pressure ranges can be between 0 ... 16 mbar and 0 ... 40 bar with accuracy classes from 0.6 to 2.5.

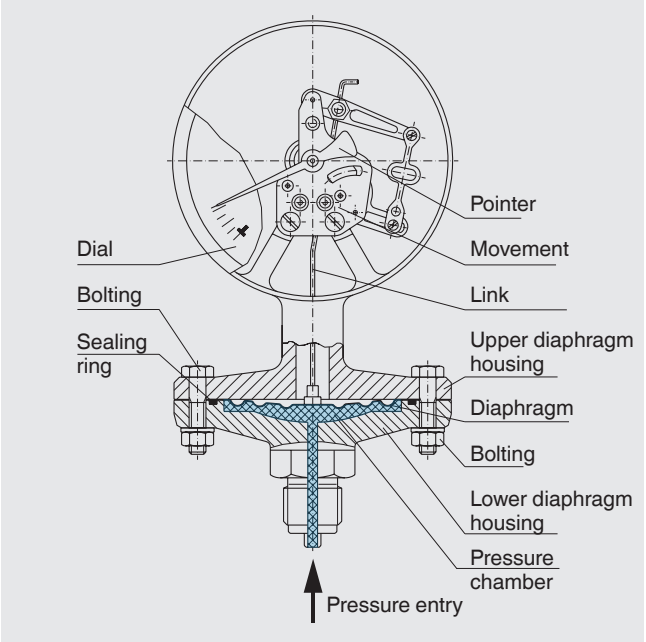

Fig. Pressure gauges with diaphragm elements

Pressure gauges with capsule elements

The capsule element comprises two circular-shaped, corrugated membranes fully-sealed around their circumference. The pressure acts on the inside of this capsule and the stroke movement generated is indicated by a pointer as the measurement of pressure.

Pressure gauges with capsule elements are particularly suited to gaseous media and relatively low pressures. Overload protection is possible within certain limits. The actuating force is increased if a number of capsule elements are connected mechanically in series (a capsule element "package").

Pressure ranges can be between 0 ... 2.5 mbar and 0 ... 0.6 bar with accuracy classes of 0.1 to 2.5.

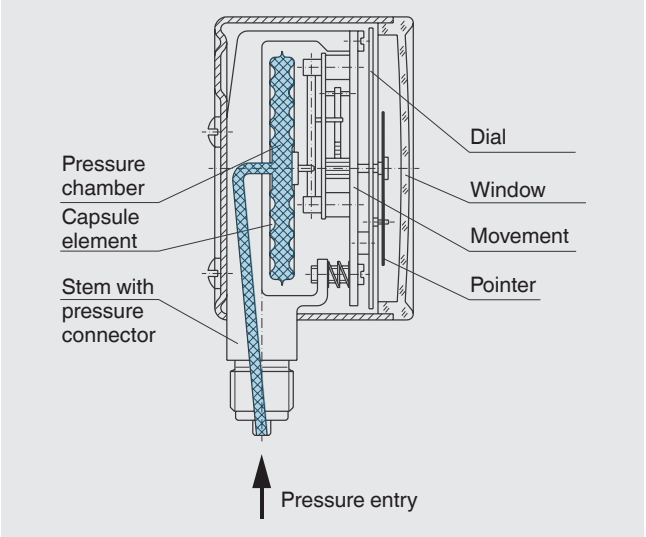

Fig. Pressure gauges with capsule elements

Absolute pressure gauges

These instruments are used where pressures are to be measured independently of the natural fluctuations in atmospheric pressure. As a general rule, all the previously shown overpressure gauge elements and measuring principles can be applied.

The pressure of the media to be measured is compared against a reference pressure which is equal to absolute zero. On the side of the measuring element that is not subjected to the pressure media, an absolute vacuum exists as the reference pressure. This function is achieved by sealing off the appropriate measuring chamber or surrounding housing.

Measuring element movement transmission and pressure indication are achieved in the same way as with the previously described overpressure gauges.

Pressure ranges can be between 0 ... 25 mbar and 0 ... 25 bar with accuracy classes of 0.6 to 2.5.

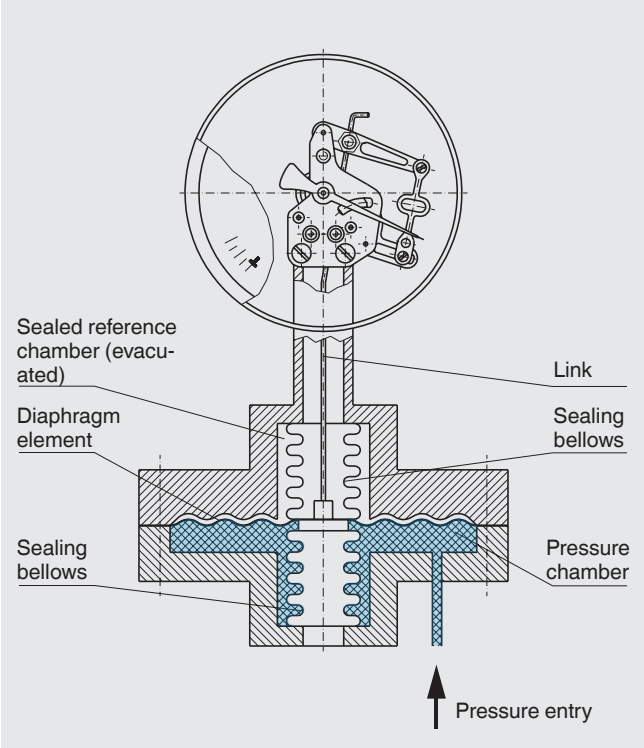

Fig. Absolute pressure gauges

Differential pressure gauges

With differential pressure gauges, the difference between two pressures is determined directly and shown on the display. Here again, all the previously shown overpressure gauge measuring elements and measuring principles can be applied.

Two sealed pressure media chambers are separated by the measuring element/s. If both operating pressures are the same, no movement of the measuring element occurs and no pressure will be indicated. A differential pressure reading is only given when one of the pressures is either higher or lower than the other.

Even with high static pressures, low differential pressures can be measured directly. With diaphragm elements, a very high overload capability is achieved.

The permissible static pressure and the overload capability on the ⊕ and ⊖ side must be observed.

In the majority of cases, measuring element movement transmission and pressure indication are achieved in the same way as with the previously described overpressure gauges.

Pressure ranges can be between 0 ... 16 mbar and 0 ... 40 bar with accuracy classes of 0.6 to 2.5.

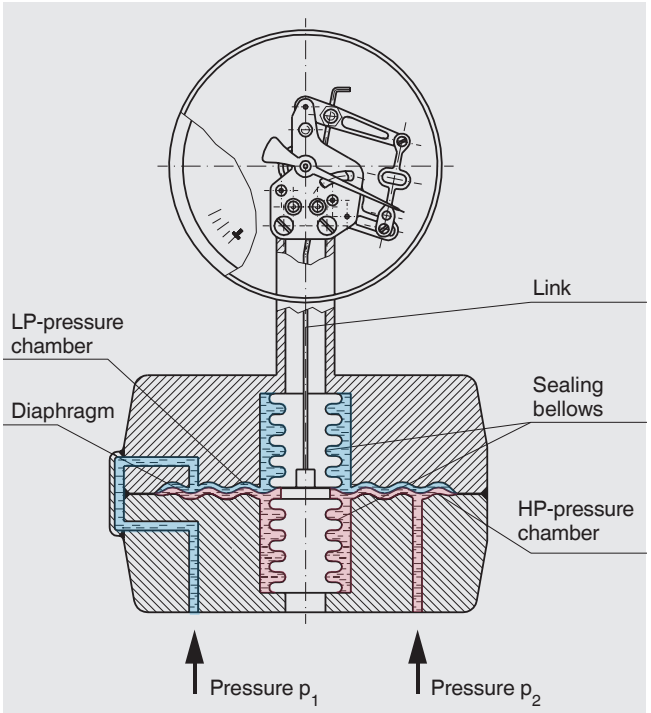

Fig. Differential pressure gauges

Applications

- Filter technology (monitoring filter state)
- Level measurement (in closed vessels)
- Flow measurement (pressure drop)

The specifications given in this document represent the state of engineering at the time of publishing.
We reserve the right to make modifications to the specifications and materials.

WIKA Alexander Wiegand SE & Co. KG
Alexander-Wiegand-Straße 30
63911 Klingenberg/Germany
Tel. (+49) 9372/132-0
E-mail info@wika.de
www.wika.de

09/2010 GB

Information on process connections

Applications

- For the definition of the process connections for WIKA pressure measuring instruments

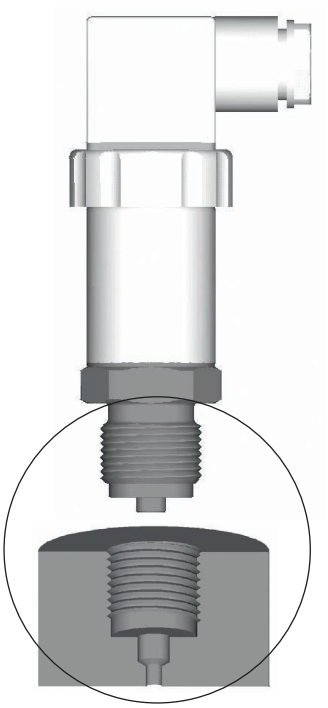

Scope

- Pressure sensors
- Electronic pressure switches
- UHP transducer

Contents

- Mounting at the process connection
- Dimensions of the process connections
- Max. measuring ranges and overpressure limits depending on the process connections

Description

WIKA offers pressure measuring instruments with a variety of process connections in order to meet diverse customer-specific application requirements.

Smart in sensing

Mounting

The following notes relate to process connections with specified geometric and functional features in accordance with technical regulations.

Requirements for the mounting point

The mounting point must meet the following conditions:

- Keep the sealing faces at the pressure sensor and the measuring location clean and free from scratches.
- Remove the protective cap and/or the Mylar or protective foil not until shortly before installation.
- Observe the permissible ambient temperatures. Do not exceed the performance limits of the measuring instrument specified by the manufacturer. Consider possible restrictions on the ambient temperature range due to the mating connectors used.

Mechanical mounting

Carry out the mounting in accordance with the following steps:

1. Prior to commissioning, subject the instrument to a visual inspection.

→ Leaking liquid is indicative of damage.

2. Depressurise the container, pipeline or system.
3. Ensure that the sealing faces are clean and do not show any mechanical damage.
4. Seal the sealing face, see „Sealing variants“.
5. At the mounting point, screw the instrument in hand-tight.

→ Make sure not to cross the threads.

6. For force transmission, use only the defined spanner flats, see „Spanner flats“.

→ The case must not be subjected to mechanical load. Never use the case as a working surface.

7. Tighten the instrument with a torque wrench using the spanner flats.

The correct torque depends on the mounting point (e.g. material and shape).

Only use the instrument if it is in perfect condition with respect to safety.
Only use original accessories. For accessories, see data sheet for the respective pressure sensor or pressure switch.

Spanner flats

To avoid damage to the instrument, always use the correct spanner flats.

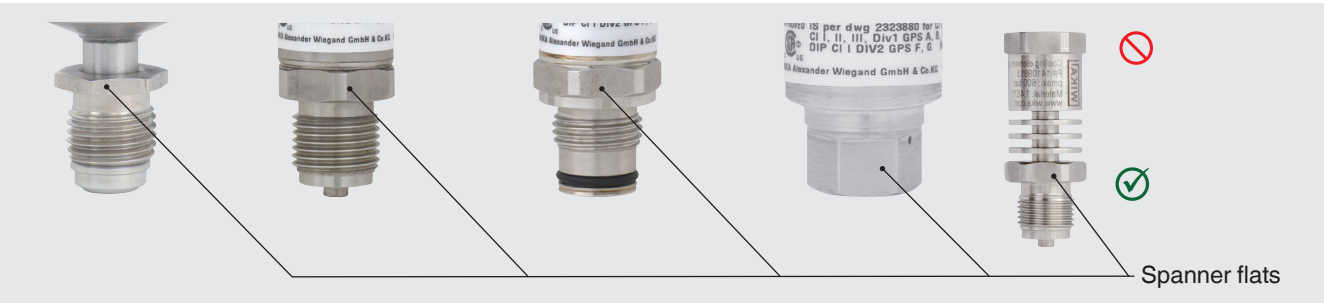

Always use the spanner flats at the thread.

Sealing variants
To meet the diverse requirements and operating conditions in different applications, seal the process connections as follows:

Parallel threads For sealing, use flat gaskets, lens-type sealing rings or WIKA profile sealings at the sealing face ①.	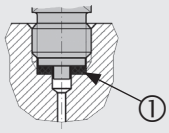 per EN 837	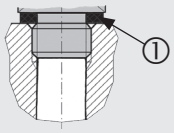 per DIN EN ISO 1179-2 (formerly DIN 3852-E)
Tapered threads For sealing, the thread is wound with additional sealing material, e.g. PTFE tape.	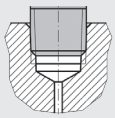 NPT, R and PT	

→ For notes on seals, see WIKA data sheet AC 09.08 at www.wika.com.

Additional notes for special process connections

In certain applications, process connections with special geometric or functional properties are used. This section describes the relevant deviations, technical requirements and notes on the safe and compliant use of such connections.

Cooling element
Cooling elements must not be insulated.
The cooling elements are crucial for regulating the temperature of the pressure measuring instrument. Insulation would impede heat dissipation and could cause the instrument to overheat. This impairs the measurement accuracy and shortens the service life of the pressure measuring instrument.

Flush process connections
Diaphragms must be undamaged.
The diaphragm is the direct interface between the medium and the measuring instrument and is crucial for the following aspects:
- Measurement accuracy: An intact diaphragm ensures correct pressure transmission without errors.
- Prevention of blockages: Especially with viscous, crystalline or abrasive media, an undamaged diaphragm prevents blockages and damage to the pressure port.
- Protection of the measuring instrument: The diaphragm protects the measuring instrument from aggressive or adhesive media.
- Hygiene and cleaning: An undamaged diaphragm makes cleaning easier and prevents contamination, which is particularly important in hygienic applications.

Hygienic process connections
The following notes must be observed when using hygienic process connections:
- Never loosen sealed filling screws on the measuring instrument. Loosening of the filling screws can lead to leakage and contamination.
- For mounting, use the appropriate fastenings. In accordance with the fittings and flange standards, suitable screws, nuts or clamps must be used to ensure a secure and leak-tight connection.
- Only use seals with a sufficiently large inner diameter. The seal must be inserted centrally to prevent contact with the diaphragm, which could lead to measuring deviations.
- Position the welding socket correctly. Position the welding socket so that the bore for leakage detection points downwards. The nozzle must be welded flush with the inner wall of the vessel and ground smooth. The surface roughness of the ground surfaces must be Ra ≤ 0.8 µm.
- Observe the seal manufacturer's instructions. When using soft or PTFE seals, observe the instructions of the seal manufacturer, particularly with regard to tightening torque and load cycles.

UHP process connections

The following notes must be observed when using UHP process connections:

- Complete the weld seam. The weld seam must be fully welded to ensure a secure and leak-tight connection.
- Observe the minimum current and heat input. To avoid damage, ensure that the current and heat input during the welding process are as low as possible.
- Cool the argon flow during the welding process. To improve the quality of the weld seam, cool the flow of argon during welding.
- Perform test welds in advance. Test welds help to prevent welding errors and improve the quality of the weld.
- Clean the connection components. Clean the connection components (such as cable glands, seals and connectors) with pure/filtered gas.

Observe the specifications and notes. Observe the specifications and notes of all components and manufacturers.

Note on VCR®-compatible connections

For VCR®-compatible connections, the union nut/male nut or fitting must be tightened beyond the hand-tight position (depending on the seals used) using a ⅛ or ¼ turn. Excessive tightening can damage the sealing lips and lead to possible leakage. Do not scratch the sealing lips.

VCR® is a registered trademark of Swagelok

Notes on rework

The following rework steps are required for UHP products:

- Set the zero point. A zero point is required; see the operating instructions for the respective instrument.
- Check for leak tightness. Check the UHP connections (threaded connections, welds) for leak tightness using a suitable test (e.g. helium leak test).
- Check the gas flow. Switch the gas flow on and off at least 10 times to remove any particles that may have entered during installation. The flow rate of the gas should correspond to the subsequent process flow.

Dimensions in mm [in]

Threaded connections

DIN EN ISO 1179-2

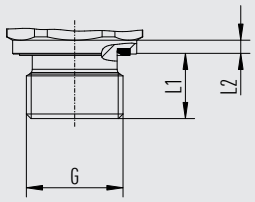

G	L1	L2
G ⅛ A	8 [0.31]	1.5 [0.059]
G ¼ A	12 [0.47]	2 [0.08]
G ½ A	14 [0.55]	3 [0.12]

DIN EN ISO 9974-2

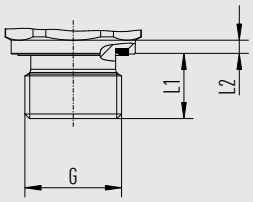

G	L1	L2
M10 x 1.0	8 [0.31]	1.5 [0.059]
M14 x 1.5	12 [0.47]	2 [0.08]

EN 837

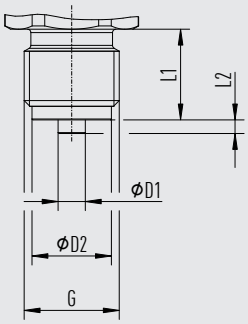

G	L1	L2	D1	D2
G ¼ B	13 [0.51]	2 [0.08]	5 [0.19]	9.5 [0.374]
G ⅜ B	16 [0.63]	3 [0.12]	5.5 [0.22]	13 [0.512]
G ½ B	20 [0.79]	3 [0.12]	6 [0.24]	17.5 [0.689]

EN 837

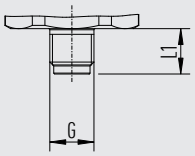

G	L1
G ⅛	10 [0.39]

ISO 6149-2

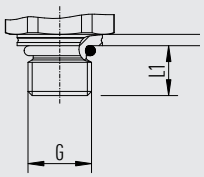

G	L1
M14 x 1.5	11 [0.43]

DIN 16288

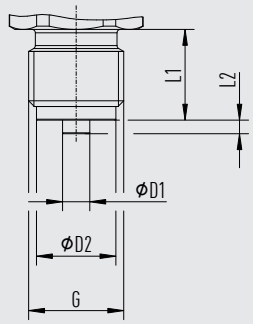

G	L1	L2	D1	D2
M12 x 1.5	13 [0.51]	2 [0.08]	5 [0.19]	9.5 [0.374]
M20 x 1.5	20 [0.79]	3 [0.12]	6 [0.24]	17.5 [0.689]

SAE J514, sealing cone

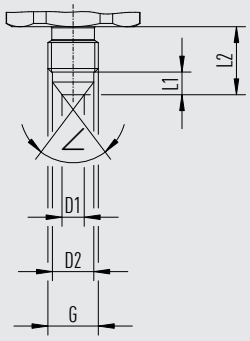

G	L1	L2	D1	D2	∠
7/16-20 UNF-2A	5 [0.2]	15 [0.59]	4.9 [0.193]	9.12 [0.359]	74°

SAE J514, O-ring BOSS

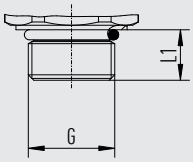

G	L1
¾-16 UNF-2A, O-ring BOSS	11.13 [0.4382]

SAE J514, O-ring BOSS

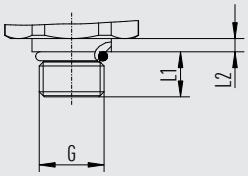

G	L1	L2
7/16-20 UNF-2A, O-ring BOSS	9.14 [0.3598]	2.92 [0.1149]
9/16-18 UNF-2A, O-ring BOSS	9.93 [0.3909]	2.92 [0.1149]

ANSI/ASME B1.20.1

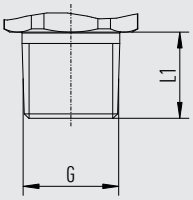

G	L1
⅛ NPT	10 [0.39]
¼ NPT	13 [0.51]
½ NPT	19 [0.75]

KS B 0222

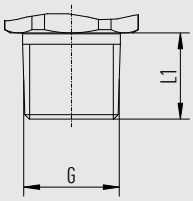

G	L1
PT ¼	13 [0.51]
PT ⅜	15 [0.59]
PT ½	19 [0.75]

ISO 7

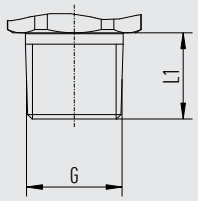

G	L1
R ¼	13 [0.51]
R ⅜	15 [0.59]
R ½	19 [0.75]

JIS B 7505-76

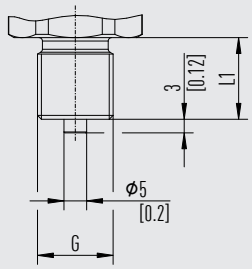

G	L
G ¼ B	16 [0.63]

JIS B 2351-1

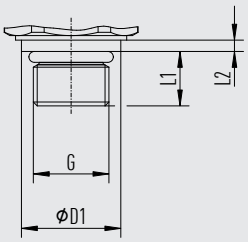

G	D1	L1	L2
G ¼ FORM O with collar	19 [0.75]	10 [0.39] 1)	2 [0.08]
G ⅜ FORM O with collar	21.9 [0.962] 1)	12 [0.47]	2.5 [0.098]

1) Not in accordance with standard

Connections with female thread

ANSI/ASME B1.20.1

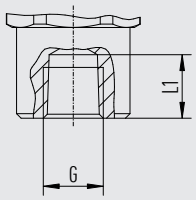

G	L1
¼ NPT	14 [0.55]

EN 837

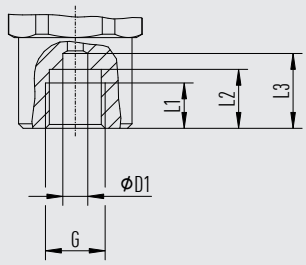

G	L1	L2	L3	D1
G ¼	10 [0.39]	13 [0.51]	16.5 [0.65]	5.5 [0.217]

ISO 8434-1

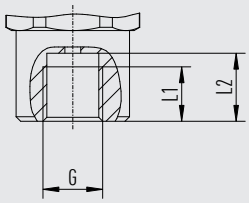

G	L1	L2
G ¼ (compatible with bite-type fittings)	12 [0.47]	15 [0.59]

Metric threads

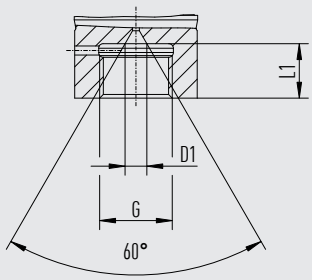

G	L1	D1
M16 x 1.5, with sealing cone	12 [0.47]	4.8 [0.189]
M20 x 1.5, with sealing cone	15 [0.59]	4.8 [0.189]

UNF thread

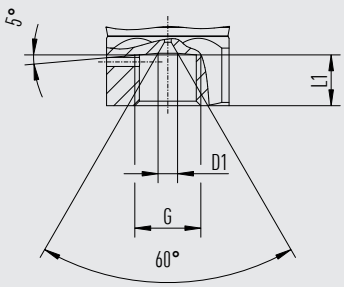

G	L1	D1
9/16-18 UNF-2B (F250-C)	11.2 [0.441]	4.3 [0.169]

Flush threaded connections

G ½ B flush

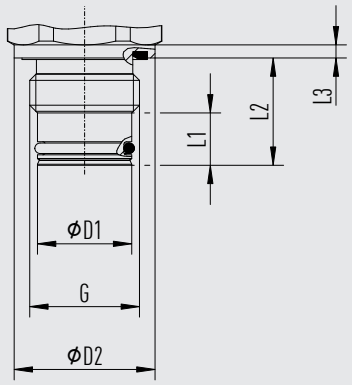

G	L1	L2	L3	D1	D2
G ½ B	10 [0.39]	20.5 [0.807]	3 [0.12]	18 [0.71]	26.9 [1.059]

G 1 B flush

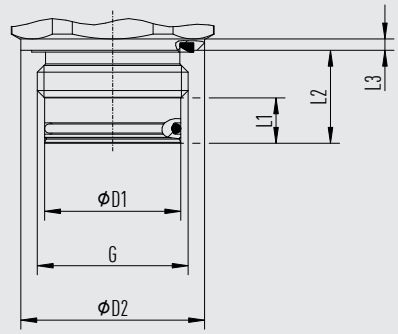

G	L1	L2	L3	D1	D2
G 1 B	10 [0.39]	20.5 [0.807]	2.5 [0.098]	30 [1.18]	40.5 [1.595]

G 1 B hygienic

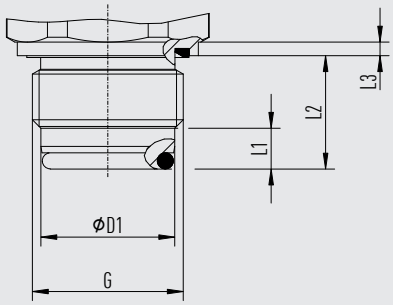

G	L1	L2	L3	D1
G 1 B	9 [0.35]	25 [0.98]	3 [0.12]	29.5 [1.161]

G 1 B hygienic 3A

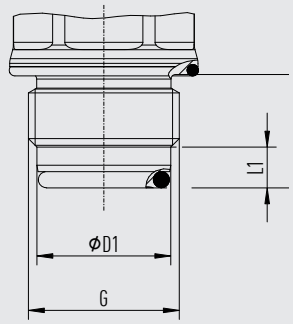

G	L1	D1
G 1 B	9 [0.35]	29.5 [1.161]

Tapped holes in mm

Tapped holes are only shown for WIKA-specific threads. For all other tapped holes, observe the applicable standards.

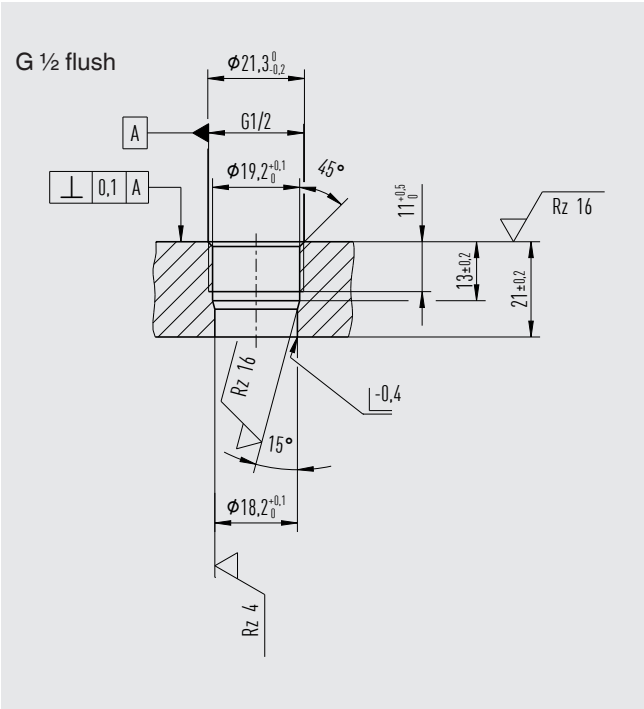

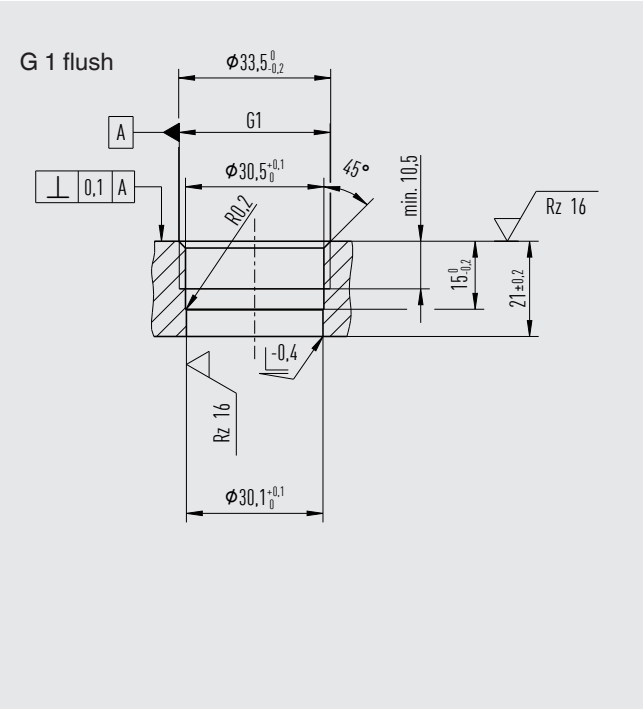

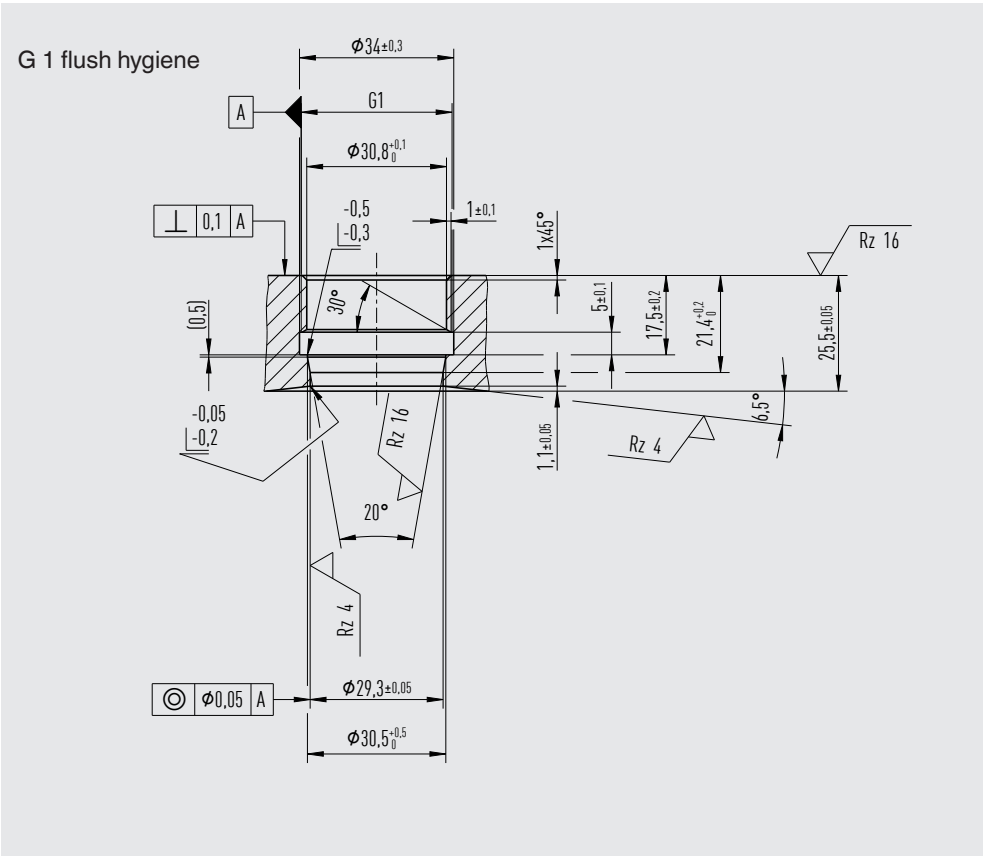

Tapped holes in inch

G ½ flash

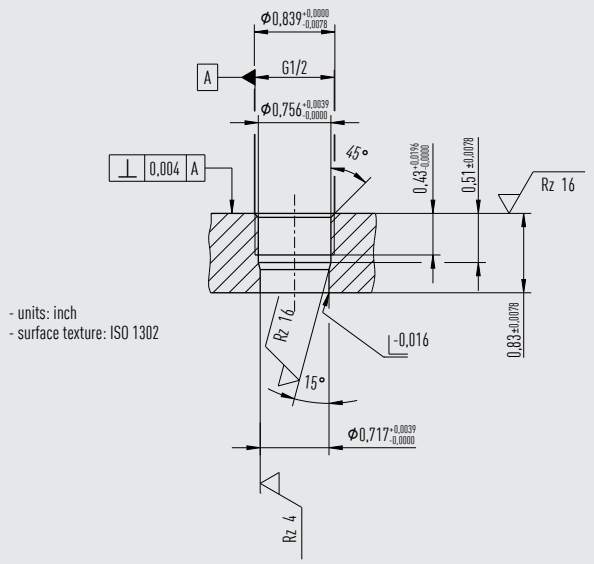

G 1 flash

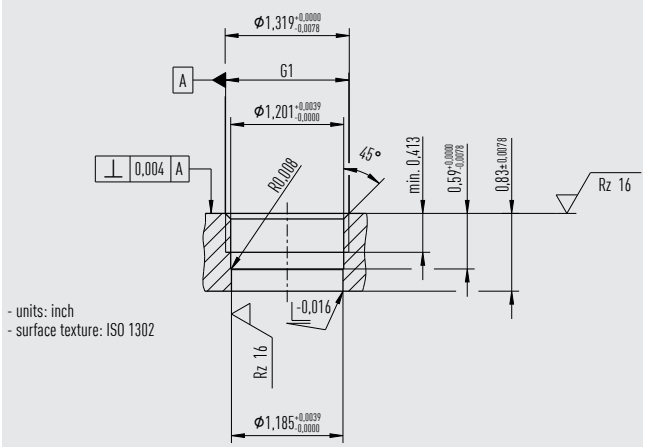

G 1 flush hygiene

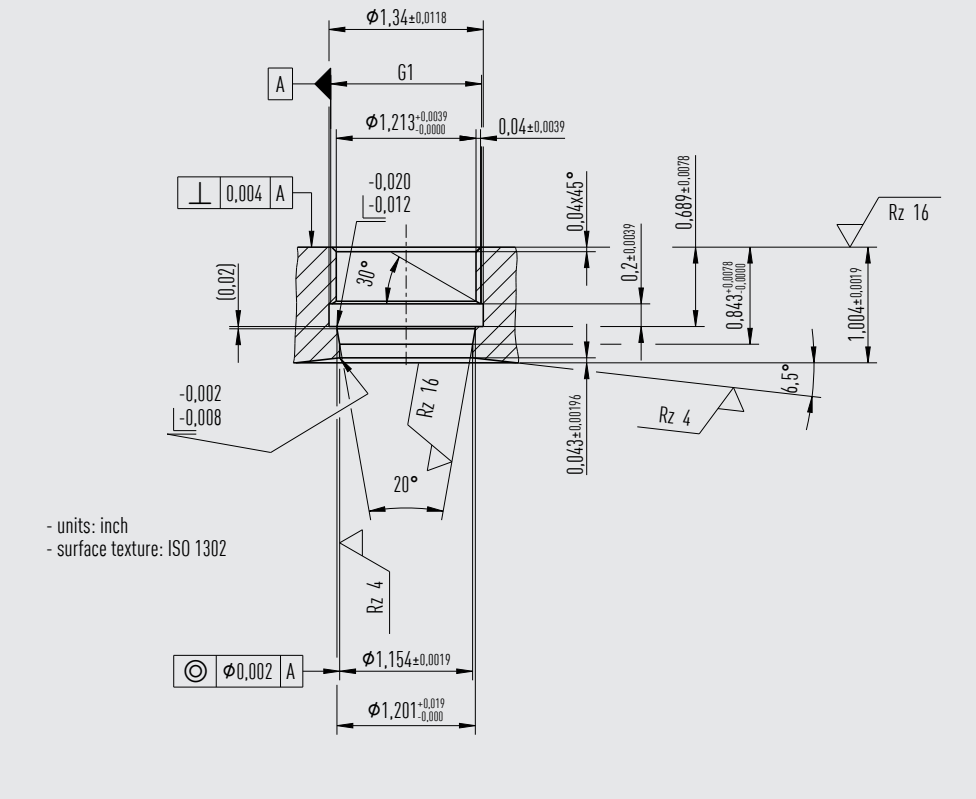

Max. measuring ranges and overpressure limits depending on the process connections

Thread size	Seal	Max. measuring range in bar [psi]	Overpressure limit in bar [psi]
EN 837			
G ⅜ B, male	WIKA seal [1)]	1,035 [15,000]	1,480 [21,500]
G ⅛ B, male	WIKA seal [1)]	400 [5,800]	572 [8,200]
G ¼ B, male	WIKA seal [1)]	1,035 [15,000]	1,480 [21,500]
G ¼, female	WIKA seal [1)]	1,035 [15,000]	1,480 [21,500]
G ½ B, male	WIKA seal [1)]	1,035 [15,000]	1,480 [21,500]
G ½ B, male [3)]	Without (from ≥ 1,000 bar [4)])	1,600 [23,200]	2,288 [33,185]
DIN EN ISO 1179-2			
G 1/8 A, male	Elastomer seal [2)]	250 [3,600]	358 [3,700]
G 1/4 A, male	Elastomer seal [2)]	600 [8,700]	858 [12,400]
G 1/4 A, male	Elastomer seal (item no. 14045531)	1,035 [15,000]	1,480 [21,500]
G 1/2 A, male	Elastomer seal [2)]	600 [8,700]	858 [12,400]
DIN EN ISO 9974-2			
M10 x 1.0, male	Elastomer seal [2)]	250 [3,600]	358 [3,700]
M14 x 1.5, male	Elastomer seal [2)]	600 [8,700]	858 [12,400]
ANSI/ASME B1.20.1			
⅛ NPT, male	Self-sealing	400 [5,800]	572 [8,300]
¼ NPT, male	Self-sealing	1,035 [15,000]	1,480 [21,500]
1/4 NPT, female	Self-sealing	1,035 [15,000]	1,480 [21,500]
½ NPT, male	Self-sealing	1,035 [15,000]	1,480 [21,500]
½ NPT, male [3)]	Self-sealing	1,600 [23,200]	2,288 [33,185]
ISO 7			
R ⅜, male	WIKA seal [1)]	1,035 [15,000]	1,480 [21,500]
R ¼, male	WIKA seal [1)]	1,035 [15,000]	1,480 [21,500]
R ½, male	WIKA seal [1)]	1,035 [15,000]	1,480 [21,500]
SAE J514			
3/4-16 UNF-2A SAE J514 O-ring BOSS	Elastomer seal [2)]	600 [8,700]	858 [12,400]
7/16-20 UNF-2A SAE J514 O-ring BOSS	Elastomer seal [2)]	600 [8,700]	858 [12,400]
7/16-20 UNF-2A SAE J514 74°	Self-sealing	800 [11,600]	1144 [16,600]
9/16-18 UNF-2A SAE J514 O-ring BOSS	Elastomer seal [2)]	600 [8,700]	858 [12,400]
JIS B2351-1			
G ⅜, male, form O with collar	Elastomer seal [2)]	600 [8,700]	858 [12,400]
G ¼ x 10, male, form O with collar	Elastomer seal [2)]	600 [8,700]	858 [12,400]
DIN 16288			
M20 x 1.5, male	WIKA seal [1)]	1,035 [15,000]	1,480 [21,500]
M20 x 1.5, male [3)]	Without (from ≥ 1000 bar [3)])	1,600 [23,200]	2,288 [33,185]
DIN 16288 (similar to EN 837)			
M12 x 1.5, male (similar to EN 837)	WIKA seal [1)]	1,035 [15,000]	1,480 [21,500]
M12 x 1.5, male (similar to EN 837) [3)]	Without (from ≥ 1000 bar [4)])	1,600 [23,200]	2,288 [33,185]
JIS B7505-76			
G ¼ B, male	WIKA seal [1)]	1,035 [15,000]	1,480 [21,500]
ISO 6149-2			

Thread size	Seal	Max. measuring range in bar [psi]	Overpressure limit in bar [psi]
M14 x 1.5	Elastomer seal [2]	600 [8,700]	858 [12,400]
ISO 8434-1			
G ¼, female (compatible with bite-type fittings)	Without [4]	1,035 [15,000]	1,480 [21,500]
KS B 0222			
PT ⅜, male	self-sealing	1,035 [15,000]	1,480 [21,500]
PT ¼, male	self-sealing	1,035 [15,000]	1,480 [21,500]
PT ½, male	self-sealing	1,035 [15,000]	1,480 [21,500]
Without			
G ½, flush	NBR, up to 120 °C	600 [8,700]	1,200 [17,400]
G ½, flush	FKM, up to100 °C	420 [6,100]	600 [8,700]
G ½, flush	EPDM, up to 150 °C	280 [4,100]	400 [5,800]
G ½, flush	FFKM, up to 150 °C	600 [8,700]	1,200 [17,400]
M16 x 1.5 female with sealing cone	Without [4]	7,000 [101,500]	8,000 [116,000]
M20 x 1.5 female with sealing cone	Without [4]	15,000 [217,600]	16,000 [232,100]
9/16-18 UNF, female F250-C	Without [4]	7,000 [101,500]	8,000 [116,000]
G 1 B hygienic 3A	Elastomer seal [2]	Not required [5]	Not required [5]
G 1 B hygienic	Elastomer seal [2]	Not required [5]	Not required [5]
G 1 B, flush	Elastomer seal [2]	Not required [5]	Not required [5]

1) Per DS AC 09.08 (materials only Cu and 1.4571)
2) Per section “Spare parts” of the respective DS
3) Process connection from CrNiMo steel 1.4542
4) The information on the maximum measuring range and overpressure limit refers to the process connection.
Depending on the selected process connection and the seal, restrictions in overpressure limit can result.
5) It is not necessary to specify the maximum measuring range and overpressure limit, as the thread is only used for significantly lower measuring ranges.

Details must be tested separately in the respective application. The specified values for the overpressure limit serve only as a rough orientation. The values depend on the temperature, the seal used, the selected torque, the type and the material of the mating thread and the prevailing operating conditions.
→ Other customised process connections on request

© 04/2003 WIKA Alexander Wiegand SE & Co. KG, all rights reserved.
The specifications given in this document represent the state of the art at the time of publishing.
We reserve the right to make modifications to the specifications and materials.

WIKA Alexander Wiegand SE & Co. KG
Alexander-Wiegand-Straße 30
63911 Klingenberg/Germany
Tel. +49 9372 132-0
info@wika.de
www.wika.de

Conversion Table of commonly used pressure units

SI Units - Engineering units (based on the metre)

		SI units						Engineering units					
	from \ to	bar	mbar	µbar	Pa	kPa	MPa	mmHg	mmWS	mWS	kp/mm²	kp/cm²	atm
SI units	**1 bar**	1	10^3	10^6	10^5	100	0.1	750.064	10.1972 · 10^3	10.1972	10.1972 · 10^{-3}	1.01972	0.986923
	1 mbar	10^{-3}	1	10^3	100	0.1	0.1 · 10^{-3}	750.064 · 10^{-3}	10.1972	10.1972 · 10^{-3}	10.1972 · 10^{-6}	1.01972 · 10^{-3}	0.986923 · 10^{-3}
	1 µbar	10^{-6}	10^{-3}	1	0.1	0.1 · 10^{-3}	0.1 · 10^{-6}	750.064 · 10^{-6}	10.1972 · 10^{-3}	10.1972 · · 10^{-6}	10.1972 · 10^{-9}	1.01972 · 10^{-6}	0.986923 · 10^{-6}
	1 Pa	10^{-5}	0.01	10	1	10^{-3}	10^{-6}	7.50064 · 10^{-3}	101.972 · 10^{-3}	101.972 · 10^{-6}	101.972 · 10^{-9}	10.1972 · 10^{-6}	9.86923 · 10^{-6}
	1 kPa	0.01	10	10 · 10^3	10^3	1	10^{-3}	7.50064	101.972	101.972 · 10^{-3}	101.972 · 10^{-6}	10.1972 · 10^{-3}	0.986923 · 10^{-3}
	1 MPa	10	10 · 10^3	10 · 10^6	10^6	10^3	1	7.50064 · 10^3	101.972 · 10^3	101.972	101.972 · 10^{-3}	10.1972	9.86923
Engineering units	**1 mmHg**	1.33322 · 10^{-3}	1.33322	1.33322 · 10^3	133.322	133.322 · 10^{-3}	133.322 · 10^{-6}	1	13.5951	13.5951 · 10^{-3}	13.5951 · 10^{-6}	1.35951 · 10^{-3}	1.31579 · 10^{-3}
	1 mmWS	98.0665 · 10^{-6}	98.0665 · 10^{-3}	98.0665	9.80665	9.80665 · 10^{-3}	9.80665 · 10^{-6}	73.5561 · 10^{-3}	1	10^{-3}	10^{-6}	0.1 · 10^{-3}	96.7841 · 10^{-6}
	1 mWS	98.0665 · 10^{-3}	98.0665	98.0665 · 10^3	9.80665 · 10^3	9.80665	9.80665 · 10^{-3}	73.5561	10^3	1	10^{-3}	0.1	96.7841 · 10^{-3}
	1 kp/mm²	98.0665	98.0665 · 10^3	98.0665 · 10^6	9.80665 · 10^6	9.80665 · 10^3	9.80665	73.5561 · 10^3	10^6	10^3	1	100	96.7841
	1 kp/cm²	0.980665	0.980665 · 10^3	0.980665 · 10^6	98.0665 · 10^3	98.0665	98.0665 · 10^{-3}	735.561	10 · 10^3	10	0,01	1	0.967841
	1 atm	1.01325	1.01325 · 10^3	1.01325 · 10^6	101.325 · 10^3	101.325	101.325 · 10^{-3}	760	10.3323 · 10^3	10.3323	10.3323 · 10^{-3}	1.03323	1

Corresponding pressure units:
- 1 Pa = 1 N/m²
- 1 hPa = 1 mbar
- 1 mmHg = 1 Torr
- 1 kp/cm² = 1 at (atü)

Notes

The table refers to DIN 1301 Part 1 (2002) and Part 3 (1979).
In accordance with the Execution Ordinance to the law on units in metrology (Ferderal German Units Ordinance) from 13th December 1985 only the following units are admissible for pressures:
- pascal (Pa)
- bar (bar)
- millimetre of mercury (mmHg), but only for blood pressure and the pressure of other physical liquids in medicine

Valid for these units in accordance with Federal German Unit Ordinance are the definitions and conversion factors per DIN 1301.

Listed in Part 1 of this standard
- pascal as derived SI unit with special name and with special unit symbol
- bar as generally applicable unit outside the SI
- millimetre of mercury as unit outside the SI with limited area of application

Part 3 of this standard defines amongst other things conversion factors for the following units
- conventional millimetre of mercury (mmHg)
- conventional metre of water (mWS)
- torr (Torr)
- technical atmosphere (at)
- standard atmosphere (atm)

WIKA
Smart in sensing

SI units - Engineering units (based on the foot)

	from \ to	SI units						Engineering units			
		bar	mbar	µbar	Pa	kPa	MPa	psi	ft H_2O	in. H_2O	in. Hg
SI units	**1 bar**	1	10^3	10^6	10^5	100	0.1	14.50377	33.4553	401.463	29.52998
	1 mbar	10^{-3}	1	10^3	100	0.1	0.1 · 10^{-3}	14.50377 · 10^{-3}	33.4553 · 10^{-3}	401.463 · 10^{-3}	29.52998 · 10^{-3}
	1 µbar	10^{-6}	10^{-3}	1	0.1	0.1 · 10^{-3}	0.1 · 10^{-6}	14.50377 · 10^{-6}	33.4553 · 10^{-6}	401.463 · 10^{-6}	29.52998 · 10^{-6}
	1 Pa	10^{-5}	0.01	10	1	10^{-3}	10^{-6}	0.1450377 · 10^{-3}	0.334553 · 10^{-3}	4.01463 · 10^{-3}	0.2952998 · 10^{-3}
	1 kPa	0.01	10	10 · 10^3	10^3	1	10^{-3}	0.1450377	0.334553	4.01463	0.2952998
	1 MPa	10	10 · 10^3	10 · 10^6	10^6	10^3	1	0.1450377 · 10^3	0.334553 · 10^3	4.01463 · 10^3	0.2952998 · 10^3
Engineering units	**1 psi**	68.94757 · 10^{-3}	68.94757	68.94757 · 10^3	6.894757 · 10^3	6.894757	6.894757 · 10^{-3}	1	2.30666	27.6799	2.036020
	1 ft H_2O	29.8907 · 10^{-3}	29.8907	29.8907 · 10^3	2.98907 · 10^3	2.98907	2.98907 · 10^{-3}	433.5275 · 10^{-3}	1	12	0.8826709
	1 in. H_2O	2.49089 · 10^{-3}	2.49089	2.49089 · 10^3	0.249089 · 10^3	0.249089	0.249089 · 10^{-3}	36.12729 · 10^{-3}	83.3333 · 10^{-3}	1	73.55591 · 10^{-3}
	1 in. Hg	33.86389 · 10^{-3}	33.86389	33.86389 · 10^3	3.386389 · 10^3	3.386389	3.386389 · 10^{-3}	0.4911542	1.132925	13.59510	1

Corresponding pressure units:

- 1 Pa = 1 N/m^2
- 1 psi = 1 $lbf/in.^2$
- 1 mmHg = 1 Torr
- 1 kgf/cm^2 = 1 at

Notes

The table refers to ISO 31-1:1992 and ISO 31-3:1992
For lengths ISO 31-1 defines conversion factors for units no longer to be used:

- inch (in)
- foot (ft)

For pressures ISO 31-3 defines conversion factors for units no longer to be used:

- pound-force per square inch ($lbf/in.^2$)
- conventional millimetre of water (mmH2O)
- conventional millimetre of mercury (mmHg)
- Torr (Torr)
- technical atmosphere (at)
- standard atmosphere (atm)

WIKA Alexander Wiegand GmbH & Co. KG
Alexander-Wiegand-Straße 30
63911 Klingenberg/Germany
Tel. (+49) 9372/132-0
E-mail info@wika.de
www.wika.de

9019022 02/2008 GB

Selection, installation, handling and operation of pressure gauges

General information

The user must ensure that the appropriate pressure gauge has been selected in terms of scale range and design.
The scale range is optimally selected when the operating pressure lies in the middle third of the scale range.

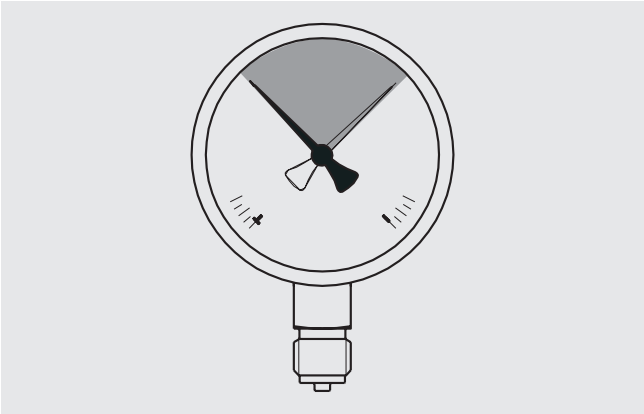

The pressure gauge must be mounted free from vibration and should be aligned so that it is easy to read.

The process connection must be sealed properly.

For zero point checking or the exchange of the instrument during operation, the installation of a shut-off device between pressure tapping and pressure gauge is recommended.

Case designs

For operational safety and the protection of personnel who find themselves in the vicinity of the measuring location, the EN 837-2 user standard requires different safety levels for cases.

Safety levels for cases per EN 837

- “S1” with blow-out device in case back
- “S2” for NS 40 ... NS 80 with blow-out device in case back or blow-out back
- “S3” for NS 40 ... NS 250 with solid baffle wall ① (Solidfront) and blow-out back ②

Exploded diagram of safety level “S3”

For non-hazardous, liquid media < 25 bar without case filling, no safety level is required. For gaseous or vaporous media from an operating pressure of 25 bar, in accordance with EN 837-2, a pressure gauge with safety level “S3” is recommended. Furthermore, in accordance with EN 837-2, further criteria are specified for the selection of the appropriate safety level for specific fields of application and instrument versions.

Instrument fixing

If the line to the instrument is not rigid enough for a vibration-free installation, the gauge should be mounted by means of appropriate fastening elements for wall or pipe mounting - if necessary, through the insertion of a capillary.

Measuring system dampening

If vibrations cannot be avoided by means of suitable installation, instruments with a liquid case filling should be used.

Part of your business

Shut-off devices

Depending on the intended use, stopcocks or shut-off valves are fitted upstream of the pressure gauge.

Stopcock and shut-off valve
Stopcocks have up to 4 functions:

- **Vent** The supply line is shut and the pressure element is connected to the atmosphere. The zero point can be checked.
- **Operation** The supply line is open, the pressure element is pressurised.
- **Blow out** The supply line is open, the medium escapes into the atmosphere.
- **Testing** The supply line is open and, in addition to the working pressure gauge, a test pressure gauge can be installed if a test connection is available.

Shut-off valves with or without test connection in accordance with DIN 16270 or DIN 16271 have a vent screw between the valve seat and instrument connection. If the vent screw is loosened, the venting can be controlled through the thread.

In specific applications (e.g. steam boilers) the shut-off devices must have a test connection, so that the pressure gauge can be tested without being dismounted. With shut-off valves in accordance with DIN 16272, the test connection can be isolated separately. In the process industry, the block-and-bleed valve is used for this functionality.

Due to their one-piece design, monoflanges can withstand high overpressures. Through this, the robust and compact mounting of the measuring instrument directly to the process flange is possible.

Temperature load

When mounting the pressure gauge it must be ensured that, taking into consideration the influence of convection and heat radiation, no deviation above or below the permissible ambient and media temperatures can occur. Thus the instrument and the shut-off device must be protected by sufficiently long measuring lines or syphons. The influence of temperature on the indication accuracy must be observed.

Diaphragm seals/Separators

In the case of aggressive, hot, highly viscous, contaminated or crystallising media, which must not penetrate into the pressure element, diaphragm seals must be provided as separators.

To transmit the pressure to the pressure element, a neutral system fill fluid is used, which must be selected to correspond to the measuring range, temperature and compatibility with the medium. The connection between instrument and diaphragm seal must not be disconnected under any circumstances.

Protection of the pressure elements from overpressure

If the medium is subject to rapid changes in pressure, or pressure surges are expected, then these must not act directly on the pressure element. The action of the pressure surges must be dampened, for example with the fitting of a throttle section (reduction in cross-section in the pressure port) or through the addition of an adjustable snubber.
If, to favour a higher display resolution, the measuring range selected is smaller than the maximum pressures that occur for short times, the pressure element must be protected against damage. For this purpose, an overpressure protector must be connected upstream (external protection); this closes immediately in the event of a pressure surge, and only gradually if the pressure rises slowly. The closing pressure to be set thus depends on the pressure profile over time. A further possibility is the use of a pressure gauge with high overload safety (internal protection).

Pressure tapping

The pressure tapping should be arranged with as large a bore as possible (≥ 6 mm) via a shut-off device, so that the pressure tap is not distorted by any flow in the medium.
The measuring line between the pressure tapping and the pressure gauge should have a large enough inner diameter and no sharp bends to prevent blockage and lag in the pressure transmission. Its installation with a steady slope of approx. 1:15 is recommended.

Measuring line

The measuring line should be designed and installed so that the loads occurring due to expansion, vibration and thermal effects can be absorbed.
With gaseous media, a drain should be provided at the lowest point; with liquid media, a vent should be provided at the highest point.

For particle-laden gases or liquids, separators must be provided which can be isolated from the plant during operation, using shut-off devices, and emptied. If the instrument needs to be mounted either higher or lower than the pressure tapping, the measuring range shifts if the medium in the measuring line does not have the same density as the ambient air.

The shift, Δp, is derived from the density difference (ρM - ρL) and the height difference, Δh, in accordance with the formula:

$\Delta p = (\rho_M - \rho_L) \bullet g \bullet \Delta h \bullet 10^{-5}$ (bar)

Shift in the measuring range

ρ_M = Density of the medium (kg/m^3)

ρ_L = Density of the ambient air (kg/m^3)
(1.205 kg/m^3 at 20 °C)

Δh = Height difference (m)

g = Gravitational acceleration (m/s^2)
(average gravitational acceleration = 9.81 m/s^2)

The display decreases by Δp, if the pressure gauge is higher; it increases by Δp, if the pressure measuring instrument is lower than the pressure tapping.
Usually, a pressure gauge is mounted with its dial vertical. With any deviation, the position indicator on the dial must be observed.

Mounting and commissioning

For process connections with parallel threads, use flat gaskets, lens-type sealing rings or WIKA profile sealings at the sealing face ①. The tightening torque is dependent upon the process connection, the material and the sealing. With tapered threads (e.g. NPT threads), sealing is made in the threads, ② using a suitable sealing material (EN 837-2).

Parallel and tapered thread connection

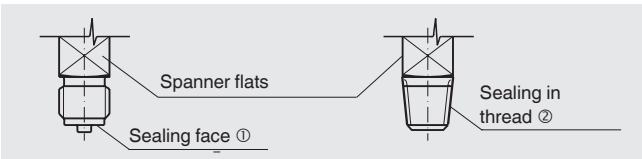

In order to orientate the instrument so that it can be read as well as possible, a connection with LH-RH union or union nut should be used.
When screwing the instruments in, the force required for sealing must not be applied through the case, but only through the spanner flats provided for this purpose, and using a suitable tool.

If the instrument is located below the pressure tapping, the measuring line must be flushed thoroughly before installation to remove any foreign bodies.

Some instrument models have a vent valve with the inscription CLOSE and OPEN for internal pressure compensation. In the condition at time of supply, this vent valve is closed (lever to setting CLOSE). Before checking and/or after installation and before commissioning, these instruments must be vented, i.e. the lever set to OPEN.

When pressure testing or blowing through pipes or vessels, the pressure gauge must not be subjected to a higher load than indicated by the identifying mark ▼ on the dial (EN 837-1 and EN 837-3). Otherwise the pressure gauge must either be protected by a shut-off device or dismounted.

Before the dismounting of a pressure gauge, it must be ensured that it is no longer pressurised. If necessary, the measuring line must have strain relief.
For diaphragm pressure gauges, the clamping bolts of the upper and lower flange must not be loosened.
Liquid media with the property of changing the volume during solidification can damage the measuring system (e.g. water if it falls below the freezing point).
Residual media in dismounted pressure gauges can result in a risk to persons, the environment and equipment. Sufficient precautionary measures must be taken.

Operation

In order to prevent any pressure surges, shut-off devices must only be opened slowly.

The maximum pressure for static load is indicated by the identifying mark ▼ on the dial (EN 837-1 and EN 837-3). Lower values apply for alternating loads.

For a zero point check during operation, the shut-off device must be closed and the pressure element vented. The pointer must then be within the range marked h at the zero point.

If the pointer is outside the transverse bar, it can generally be assumed that the pressure element is permanently deformed, which would have to be subjected to closer inspection in order to avoid measuring errors or accidents.

To check the display during operation, the pressure gauge must be separated from the process, via the shut-off device with test connection, and loaded with a test pressure. For instruments in accordance with EN 837-1 and EN 837-3, the permissible error limits are defined.

Improper handling with hazardous media, such as, for example, oxygen, acetylene, flammable or toxic substances, as well as in refrigeration systems, compressors etc., can cause dangerous or harmful media to escape into the environment, which can lead to damage or injury. For these media, in addition to all standard regulations, the appropriate existing codes or regulations must also be followed.

Storage

To avoid damage, the following points must be observed when storing the pressure gauges until installation:

- Leave the instruments in their original packaging and store them protected from damage by external influences.
- Following any possible removal of the instruments, e.g. for testing, the instrument should again be stored in its original packaging.
- Storage temperature range: -40 ... +70 °C
  Deviating storage temperatures are possible. The permissible temperature range can be taken from the respective data sheet.
- Protect the instruments from moisture and dust.

Reference documents

Quoted standards

EN 837-1
Bourdon tube pressure gauges - part 1:
Dimensions, metrology, requirements and testing

EN 837-2
Pressure gauges - part 2:
Selection and installation recommendations for pressure gauges

EN 837-3
Diaphragm and capsule pressure gauges - part 3:
Dimensions, metrology, requirements and testing

DIN 16270
PN 250 and PN 400 valves without test connection for pressure gauges

DIN 16271
PN 250 and PN 400 valves with test connection for pressure gauges

DIN 16272
PN 250 and PN 400 valves with blocking test connection for pressure gauges

Shut-off devices

Stopcock

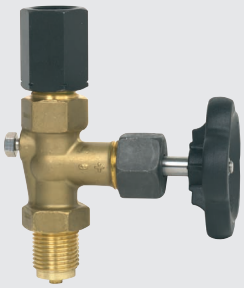

Shut-off valve

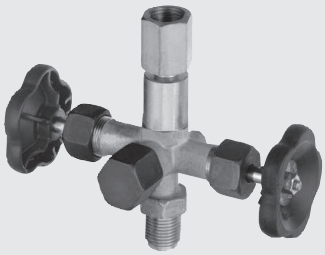

Shut-off valve with separately isolatable test connection

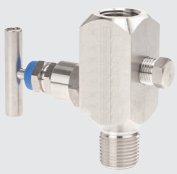

Needle valve with vent connection

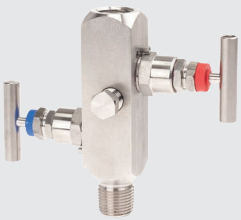

Block-and-bleed valve

Double-block-and-bleed valve manifold

Monoflange

Mounting accessories

LH-RH union

Adjustable snubber

Adapter piece for instrument mounting bracket

Instrument mounting bracket

Syphon, compact form

Syphon, trumpet form

Syphon, U-form

Overpressure protector

Measuring arrangement

Proven measuring assemblies for various types of media.

	Liquid media			Gaseous media		
Filling of the measuring line	**Liquid**	**Liquid with vapour**	**Completely vapourised**	**Gaseous**	**Partially con-densed (damp)**	**Completely condensed**
Examples	Condensate	Boiling liquids	“Liquid gases”	Dry air	Moist air Flue gases	Steam
Pressure gauge above the pressure tapping			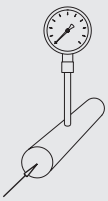	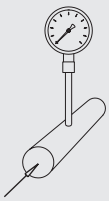	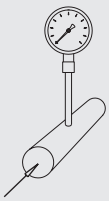	
Pressure gauge below the pressure tapping	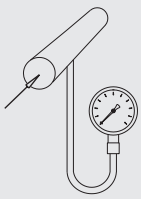	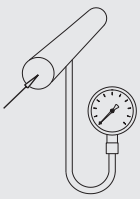				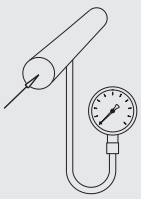

© 09/2010 WIKA Alexander Wiegand SE & Co. KG, all rights reserved.
The specifications given in this document represent the state of engineering at the time of publishing.
We reserve the right to make modifications to the specifications and materials.

WIKA Alexander Wiegand SE & Co. KG
Alexander-Wiegand-Straße 30
63911 Klingenberg/Germany
Tel. +49 9372 132-0
Fax +49 9372 132-406
info@wika.com
www.wika.com